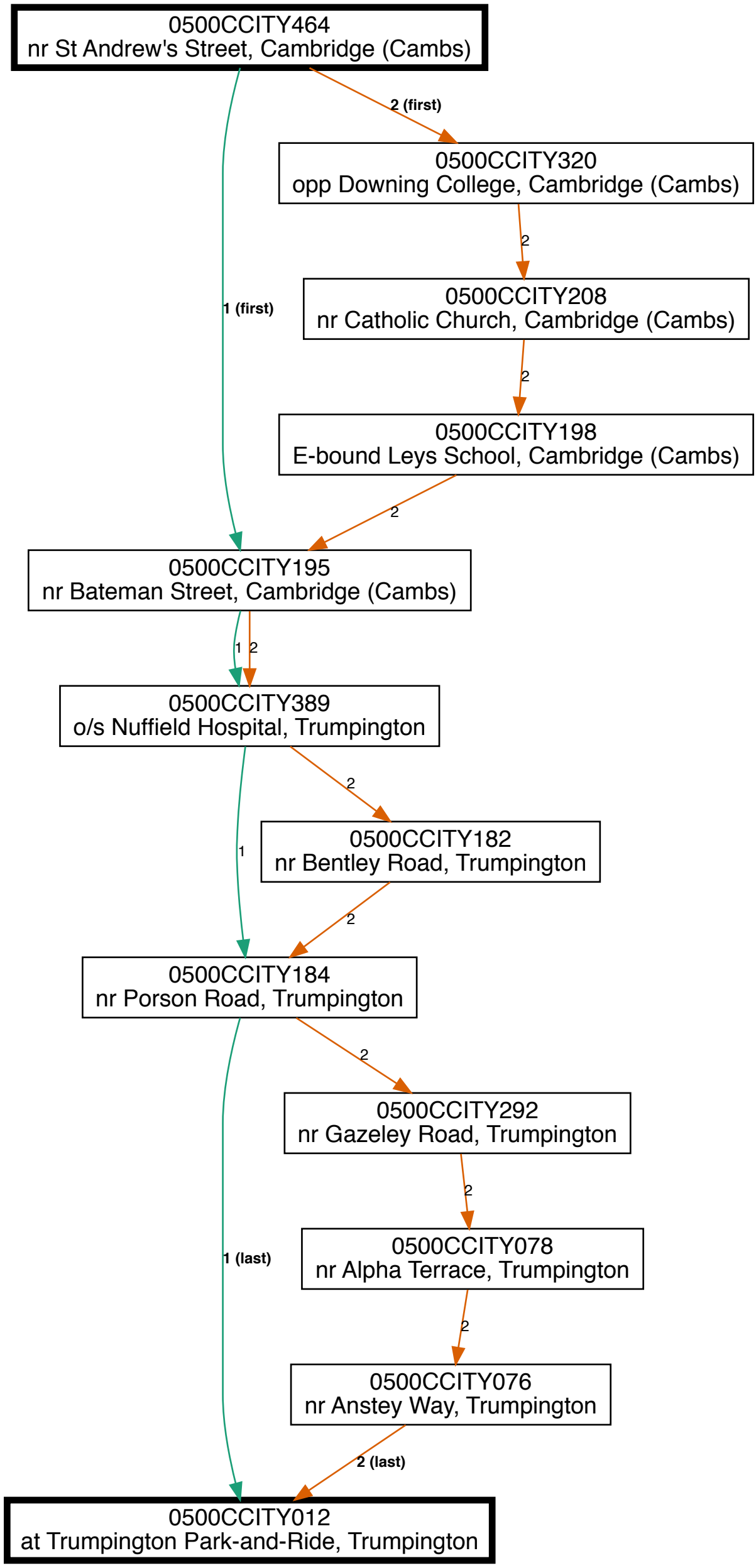

Stagecoach in Cambridge Trumpington Park & Ride outbound
Cambridge : City Centre - Trumpington Park & Ride
ea_20-PR3-_-y08-1