Operating Systems II

Steven Hand

Lent Term 2003

8 lectures for CST IB

Course Aims

This course aims to:

- impart a detailed understanding of the algorithms and techniques used within operating systems,
- consolidate the knowledge learned in earlier courses, and
- help students appreciate the trade-offs involved in designing and implementing an operating system.

Why another operating sytems course?

- OSes are some of the largest software systems around ⇒ illustrate many s/w engineering issues.
- OSes motivate most of the problems in concurrency
- more people end up 'writing OSes' than you think
  - modifications to existing systems (e.g. linux)
  - embedded software for custom hardware
  - research operating systems lots of fun
- various subsystems not covered to date. . .

Course Outline

- Introduction and Review:
  OS functions & structures. Virtual processors (processes and threads).
- CPU Scheduling.
  Scheduling for multiprocessors. RT scheduling (RM, EDF). SRT/multimedia scheduling.
- Memory Management.
  Virtual addresses and translation schemes. Demand paging. Page replacement. Frame allocation. VM case studies. Other VM techniques.
- Storage Systems.
  Disks & disk scheduling. Caching, buffering. Filing systems. Case studies (FAT, FFS, NTFS, LFS).
- Protection.
  Subjects and objects. Authentication schemes. Capability systems.
- Conclusion.
  Course summary. Exam info.

Recommended Reading

- Bacon J [and Harris T]
  Concurrent Systems or *Operating Systems*
  Addison Wesley 1997, Addison Wesley 2003
- Silberschatz A, Peterson J and Galvin P
  Operating Systems Concepts (5th Ed)
  Addison Wesley 1998
- Leffler S J
  The Design and Implementation of the 4.3BSD UNIX Operating System.
  Addison Wesley 1989
- Solomon D [and Russinovich M]
  Inside Windows NT (2nd Ed) or *Inside Windows 2000 (3rd Ed)*
  Microsoft Press 1998, Microsoft Press 2000
- Singhal M and Shivaratris, N
  Advanced Concepts in Operating Systems
  McGraw-Hill 1994
- OS links (via course web page)
  `http://www.cl.cam.ac.uk/Teaching/2002/OpSys2/`

Operating System Functions

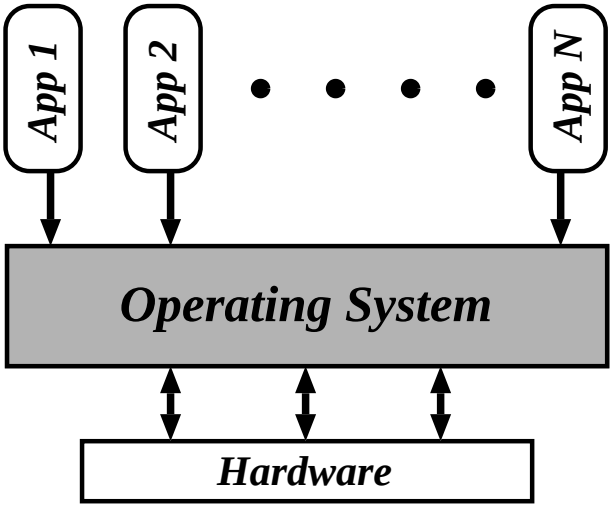

An operating system is a collection of software which:

- *securely multiplexes resources*, i.e.
  - protects applications from each other, yet
  - shares physical resources between them.
- provides an abstract *virtual machine*, e.g.
  - time-shares CPU to provide virtual processors,
  - allocates and protects memory to provide per-process virtual address spaces,
  - presents h/w independent virtual devices.
  - divides up storage space by using filing systems.

And ideally it does all this *efficiently* and *robustly*.

Hardware Support for Operating Systems

Recall that OS should *securely* multiplex resources.
⇒ we need to ensure that an application cannot:

- compromise the operating system.
- compromise other applications.
- deny others service (e.g. abuse resources)

To achieve this efficiently and flexibly, we need hardware support for (at least) *dual-mode operation*.

Then we can:

- add memory protection hardware
  ⇒ applications confined to subset of memory;
- make I/O instructions privileged
  ⇒ applications cannot directly access devices;
- use a *timer* to force execution interruption
  ⇒ OS cannot be starved of CPU.

Most modern hardware provides protection using these techniques (c/f Computer Design course).

Operating System Structures

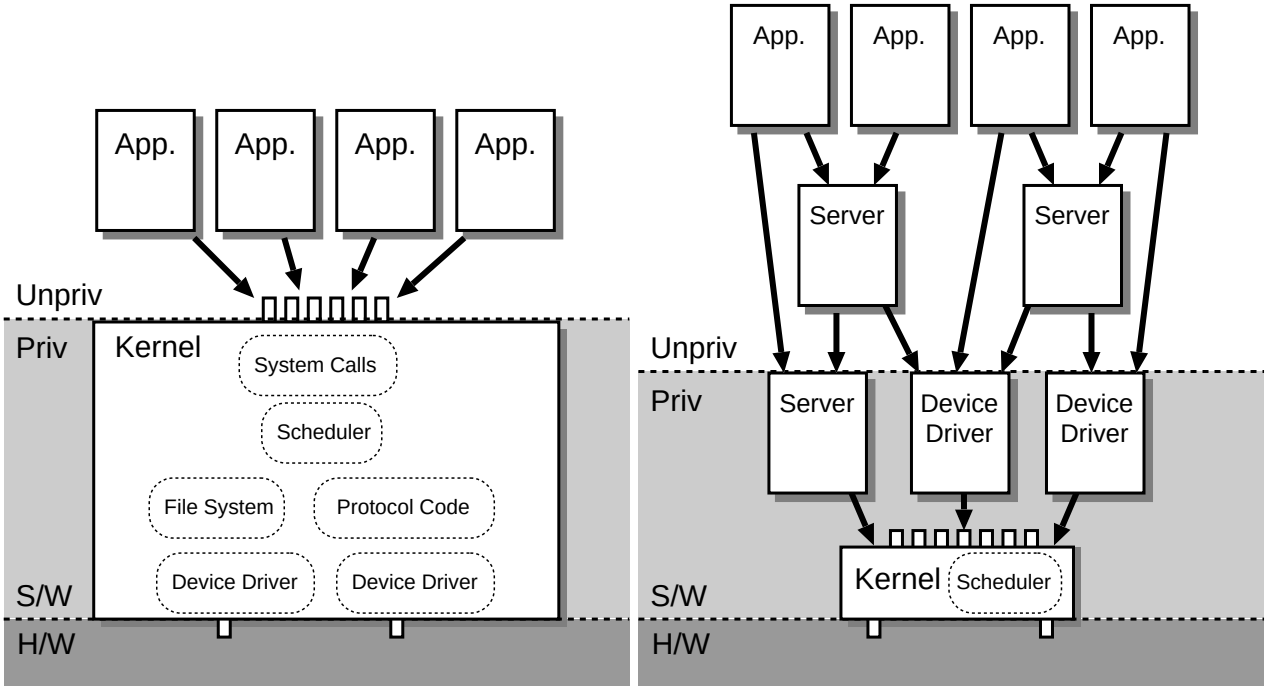

Traditionally have had two main variants:

1. Kernel-based (*lhs* above)
   - set of OS services accessible via software interrupt mechanism called *system calls*.
2. Microkernel-based (*rhs* above)
   - push various OS services into *server* processes
   - access servers via some *interprocess communication* (IPC) scheme.
   - increased modularity (decreased performance?)

Vertically Structured Operating Systems

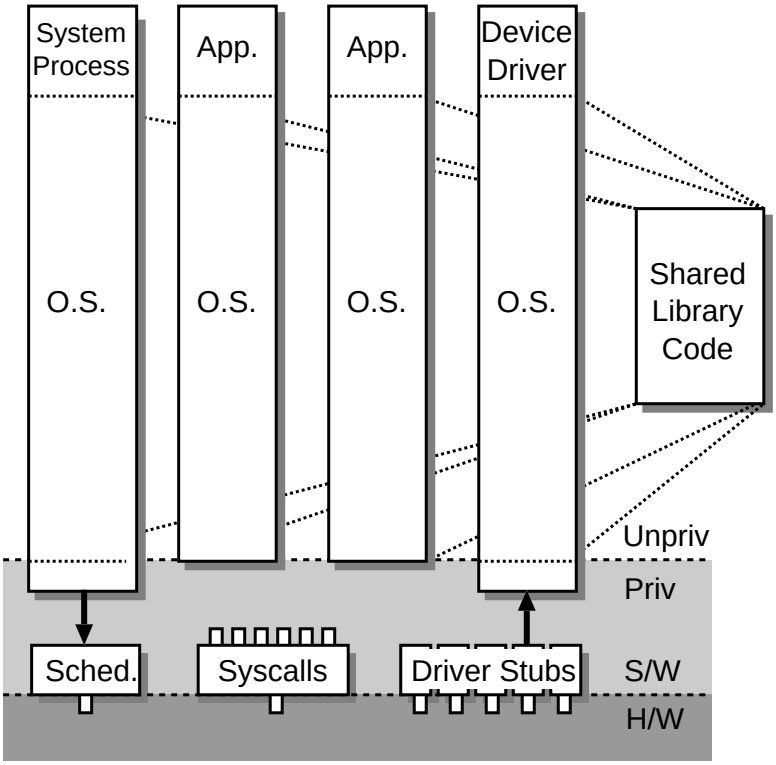

- Consider interface people really see, e.g.
  - set of programming libraries / objects.
  - a command line interpreter / window system.
- Separate concepts of protection and abstraction ⇒ get extensibility, accountability & performance.
- Examples: Nemesis, Exokernel, Cache Kernel.

We'll see more on this next year. . .

Virtual Processors

Why virtual processors (VPs) ?

- to provide the illusion that a computer is doing more than one thing at a time;
- to increase system throughput (i.e. run a thread when another is blocked on I/O);
- to encapsulate an execution context;
- to provide a simple programming paradigm.

VPs implemented via *processes* and *threads*:

- A process (or task) is a unit of resource ownership — a process is allocated a virtual address space, and control of some resources.
- A thread (or lightweight process) is a unit of dispatching — a thread has an execution state and a set of scheduling parameters.
- OS stores information about processes and threads in process control blocks (PCBs) and thread control blocks (TCBs) respectively.
- In general, have 1 process $\leftrightarrow n$ threads, $n \geq 1$ $\Rightarrow$ PCB holds references to one or more TCBs.

Thread Architectures

- User-level threads
  - Kernel unaware of threads' existence.
  - Thread management done by application using an unpriviliged *thread library*.
  - Pros: lightweight creation/termination; fast ctxt switch (no kernel trap); application-specific scheduling; OS independence.
  - Cons: non-preemption; blocking system calls; cannot utilise multiple processors.
  - e.g. FreeBSD `pthreads`
- Kernel-level threads
  - All thread management done by kernel.
  - No thread library (but augmented API).
  - Scheduling can be two-level, or direct.
  - Pros: can utilise multiple processors; blocking system calls just block thread; preemption easy.
  - Cons: higher overhead for thread mgt and context switching; less flexible.
  - e.g. Windows NT/2K, Linux (?).

Hybrid schemes also exist. . . (see later)

Thread Scheduling Algorithms

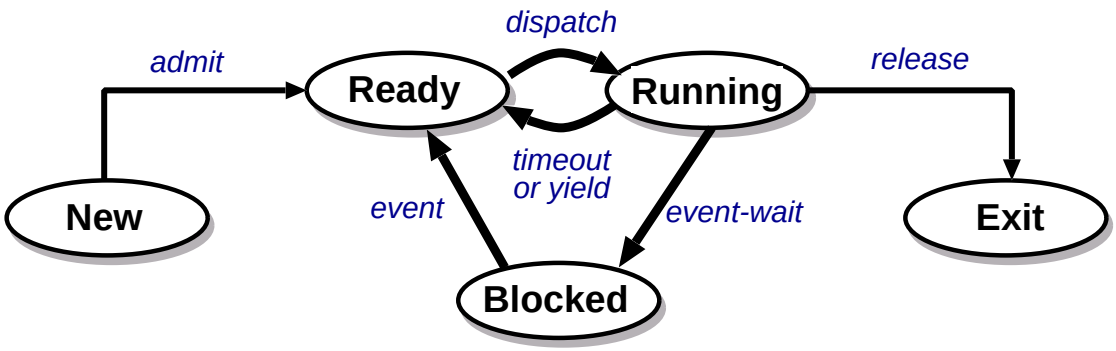

A scheduling algorithm is used to decide which ready thread(s) should run (and for how long).

Typically use *dynamic priority scheduling*:

- each thread has an associated [integer] priority.
- to schedule: select highest priority `ready` thread(s)
- to resolve ties: use round-robin within priority
  - different quantum per priority?
  - CPU bias: per-thread quantum adaption?
- to avoid starvation: dynamically vary priorities
- e.g. BSD Unix: 128 pris, 100ms fixed quantum, load- and usage-dependent priority damping.
- e.g. Windows NT/2K: 15 dynamic pris, adaptive ∼20ms quantum; priority boosts, then decays.

Multiprocessors

Two main kinds of [shared-memory] multiprocessor:

1. Uniform Memory Access (UMA), aka SMP.

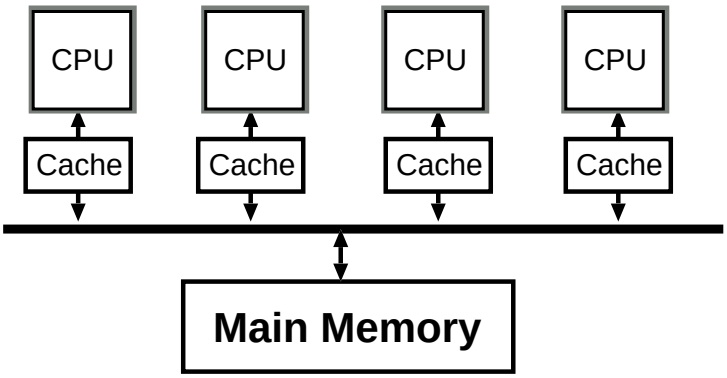

   - all (main) memory takes the same time to access
   - scales only to 4, 8 processors.

2. Non-Uniform Memory Access (NUMA).

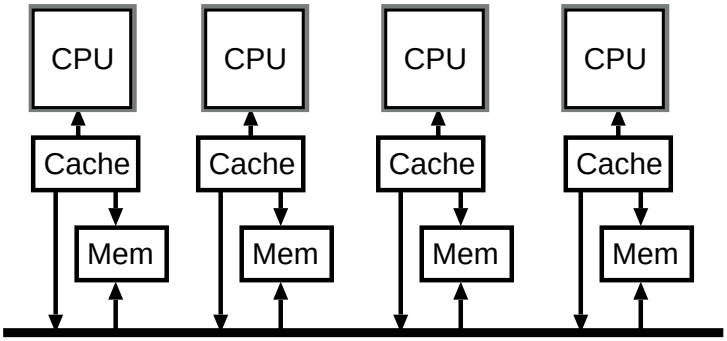

   - rarer and more expensive
   - can have 16, 64, 256 CPUs . . .

Whole area becoming more important. . .

Multiprocessor Operating Systems

Multiprocessor OSes may be roughly classed as either *symmetric* or *asymmetric*.

- Symmetric Operating Systems:
  - identical system image on each processor
    $\Rightarrow$ convenient abstraction.
  - all resources directly shared
    $\Rightarrow$ high synchronisation cost.
  - typical scheme on SMP (e.g. Linux, NT).
- Asymmetric Operating Systems:
  - partition functionality among processors.
  - better scalability (and fault tolerance?)
  - partitioning can be static or dynamic.
  - common on NUMA (e.g. Hive, Hurricane).
  - NB: asymmetric $\not\Rightarrow$ trivial "master-slave"
- Also get hybrid schemes, e.g. Disco:
  - (re-)introduce *virtual machine monitor*
  - can fake out SMP (but is this wise?)
  - can run multiple OSes simultaneously. . .

Multiprocessor Scheduling (1)

- Objectives:
  - Ensure all CPUs are kept busy.
  - Allow application-level parallelism.
- Problems:
  - Preemption within critical sections:
    - $*$ thread $\mathcal{A}$ preempted while holding spinlock.
    - $\Rightarrow$ other threads can waste many CPU cycles.
    - $*$ similar situation with producer/consumer threads (i.e. wasted schedule).
  - Cache pollution:
    - $*$ if thread from different application runs on a given CPU, lots of compulsory misses.
    - $*$ generally, scheduling a thread on a new processor is expensive.
    - $*$ (can get degradation of factor or 10 or more)
  - Frequent context switching:
    - $*$ if number of threads greatly exceeds the number of processors, get poor performance.

Multiprocessor Scheduling (2)

Consider basic ways in which one could adapt uniprocessor scheduling techniques:

- Central Queue:
  - ✔ simple extension of uniprocessor case.
  - ✔ load-balancing performed automatically.
  - ✘ n-way mutual exclusion on queue.
  - ✘ inefficient use of caches.
  - ✘ no support for application-level parallelism.
- Dedicated Assignment:
  - ✔ contention reduced to thread creation/exit.
  - ✔ better cache locality.
  - ✘ lose strict priority semantics.
  - ✘ can lead to load imbalance.

Are there better ways?

Multiprocessor Scheduling (3)

- Processor Affinity:
  - modification of central queue.
  - threads have *affinity* for a certain processor ⇒ can reduce cache problems.
  - but: load balance problem again.
  - make dynamic? (cache affinity?)
- 'Take' Scheduling:
  - pseudo-dedicated assignment: idle CPU "takes" task from most loaded.
  - can be implemented cheaply.
  - nice trade-off: load high ⇒ no migration.
- Co-scheduling / Gang Scheduling:
  - Simultaneously schedule "related" threads.

  ⇒ can reduce wasted context switches.
  - Q: how to choose members of gang?
  - Q: what about cache performance?

Example: Mach

- Basic model: dynamic priority with central queue.
- Processors grouped into disjoint *processor sets*:
  - Each processor set has 32 shared ready queues (one for each priority level).
  - Each processor has own local ready queue: absolute priority over global threads.
- Increase quantum when number of threads is small
  - 'small' means #threads $< (2\times$ #CPUs)
  - idea is to have a sensible *effective quantum*
  - e.g. 10 processors, 11 threads
    - if use default 100ms quantum, each thread spends an expected 10ms on runqueue
    - instead stretch quantum to 1s $\Rightarrow$ effective quantum is now 100ms.
- Applications provide *hints* to improve scheduling:
  1. discouragement hints: mild, strong and absolute
  2. handoff hints (aka "yield to") — can improve producer-consumer synchronization
- Simple gang scheduling used for allocation.

MP Thread Architectures

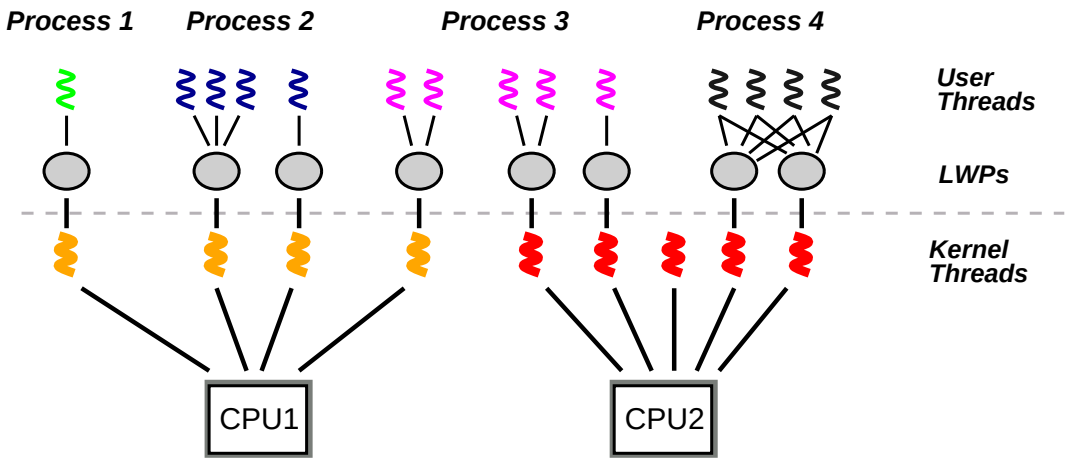

Want benefits of both user and kernel threads without any of the drawbacks ⇒ use hybrid scheme.

E.g. Solaris 2 uses *three-level scheduling*:

- 1 kernel thread ↔ 1 LWP ↔ n user threads
- user-level thread scheduler ⇒ lightweight & flexible
- LWPs allow potential multiprocessor benefit:
  - more LWPs ⇒ more scope for true parallelism
  - LWPs can be *bound* to individual processors ⇒ could in theory have user-level MP scheduler
  - kernel scheduler is relatively cache agnostic (although have processor sets (≠ Mach's)),

Overall: either *first-class threads* (Psyche) or *scheduler activations* probably better for MP.

Real-Time Systems

- Need to both produce correct results **and** meet predefined deadlines.
- "Correctness" of output related to time delay it requires to be produced, e.g.
  - nuclear reactor safety system
  - JIT manufacturing
  - video on demand
- Typically distinguish hard real-time (HRT) and soft real-time (SRT):

  HRT — output value = 100% before the deadline, 0 (or less) after the deadline.

  SRT — output value = 100% before the deadline, (100 - $f(t)$)% if t seconds late.
- Building such systems is all about *predictability*.
- It is *not* about speed.

Real-Time Scheduling

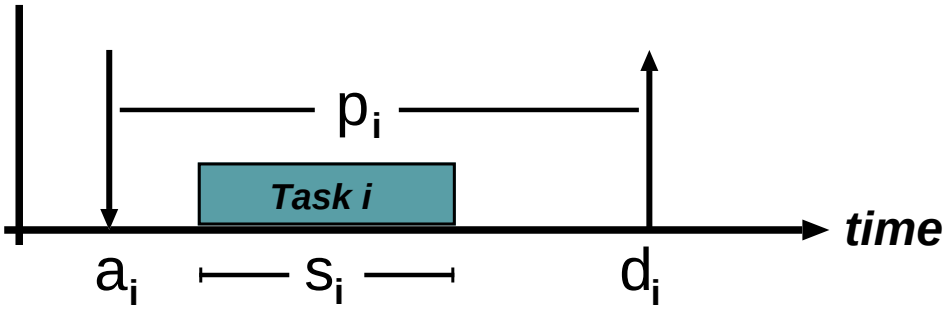

- Basic model:
  - consider set of tasks T_i, each of which arrives at time a_i and requires s_i units of CPU time before a (real-time) deadline of d_i.
  - often extended to cope with *periodic* tasks: require s_i units every p_i units.
- Best-effort techniques give no predictability
  - in general priority specifies *what* to schedule but not *when* or *how much*.
  - i.e. CPU allocation for thread t_i, priority p_i depends on all other threads at t_j s.t. $p_j \geq p_i$.
  - with dynamic priority adjustment becomes even more difficult.

$\Rightarrow$ need something different.

Static Offline Scheduling

Advantages:

- Low run-time overhead.
- Deterministic behaviour.
- System-wide optimization.
- Resolve dependencies early.
- Can prove system properties.

Disadvantages:

- Inflexibility.
- Low utilisation.
- Potentially large schedule.
- Computationally intensive.

In general, offline scheduling only used when determinism is the overriding factor, e.g. MARS.

Static Priority Algorithms

Most common is Rate Monotonic (RM)

- Assign static priorities to tasks off-line (or at 'connection setup'), high-frequency tasks receiving high priorities.
- Tasks then processed with no further rearrangement of priorities required ($\Rightarrow$ reduces scheduling overhead).
- Optimal, static, priority-driven alg. for preemptive, periodic jobs: i.e. no other static algorithm can schedule a task set that RM cannot schedule.
- Admission control: the schedule calculated by RM is always feasible if the total utilisation of the processor is less than $ln2$
- For many task sets RM produces a feasible schedule for higher utilisation (up to $\sim 88\%$); if periods harmonic, can get 100%.
- Predictable operation during transient overload.

Dynamic Priority Algorithms

Most popular is Earliest Deadline First (EDF):

- Scheduling pretty simple:
  - keep queue of tasks ordered by deadline
  - dispatch the one at the head of the queue.
- EDF is an optimal, dynamic algorithm:
  - it may reschedule periodic tasks in each period
  - if a task set can be scheduled by any priority assignment, it can be scheduled by EDF
- Admission control: EDF produces a feasible schedule whenever processor utilisation is $\leq$ 100%.
- Problem: scheduling overhead can be large.
- Problem: if system overloaded, all bets are off.

Notes:

1. Also get least slack-time first (LSTF):
   - similar, but not identical
   - e.g. A: 2ms every 7ms; B: 4ms every 8ms
2. RM, EDF, LSTF all *preemptive* (c/f P3Q7, 2000).

Priority Inversion

- All priority-based schemes can potentially suffer from *priority inversion*:
- e.g. consider low, medium and high priority processes called P_l, P_m and P_h respectively.
  1. first P_l admitted, and locks a semaphore $\mathcal{S}$.
  2. then other two processes enter.
  3. P_h runs since highest priority, tries to lock $\mathcal{S}$ and blocks.
  4. then P_m gets to run, thus preventing P_l from releasing $\mathcal{S}$, and hence P_h from running.
- Usual solution is *priority inheritence*:
  - associate with every semaphore $\mathcal{S}$ the priority P of the highest priority process waiting for it.
  - then temporarily boost priority of *holder* of semaphore up to P.
  - can use handoff scheduling to implement.
- NT "solution": priority boost for CPU starvation
  - checks if $\exists$ ready thread not run $\geq$ 300 ticks.
  - if so, doubles quantum & boosts priority to 15

Multimedia Scheduling

- Increasing interest in multimedia applications (e.g. video conferencing, mp3 player, 3D games).
- Challenges OS since require presentation (or processing) of data in a timely manner.
- OS needs to provide sufficient *control* so that apps behave well under contention.
- Main technique: exploit SRT scheduling.
- Effective since:
  - the value of multimedia data depends on the timeliness with which it is presented/processed.

  ⇒ real-time scheduling allows apps to receive sufficient and timely resource allocation to handle their needs even when the system is under heavy load.
  - multimedia data streams are often somewhat tolerant of information loss.

  ⇒ informing applications and providing *soft* guarantees on resources are sufficient.
- Still ongoing research area. . .

Example: Lottery Scheduling (MIT)

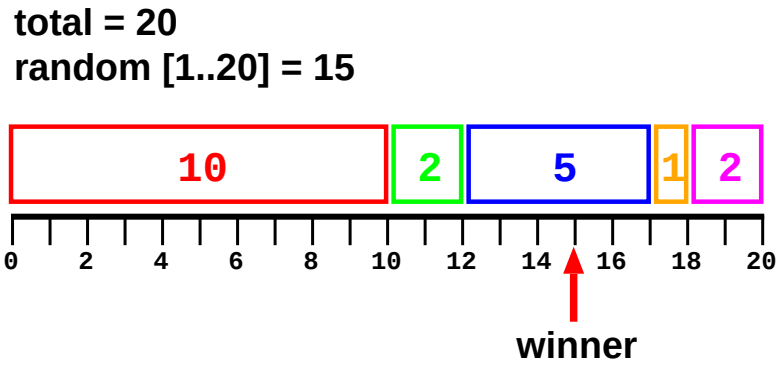

- Basic idea:
  - distribute set of *tickets* between processes.
  - to schedule: select a ticket [pseudo-]randomly, and allocate resource (e.g. CPU) to the winner.
  - approximates *proportional share*
- Why would we do this?
  - simple uniform abstraction for resource management (e.g. use tickets for I/O also)
  - "solve" priority inversion with ticket transfer.
- How well does it work?
  - $\sigma^2 = np(1-p) \Rightarrow$ accuracy improves with $\sqrt{n}$
  - i.e. "asymptotically fair"
- Stride scheduling much better. . .

Example: Atropos (CUCL)

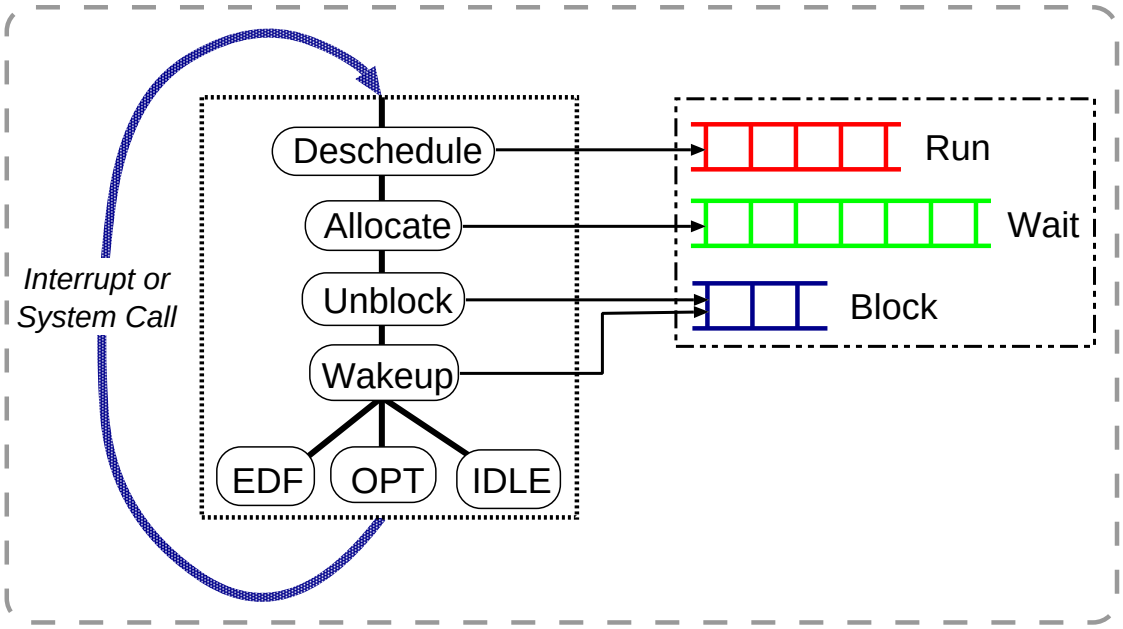

- Basic idea:
  - use EDF with implicit deadlines to effect proportional share over explicit timescales
  - if no EDF tasks runnable, schedule best-effort
- Scheduling parameters are (s, p, x) :
  - requests s milliseconds per p milliseconds
  - x means "eligible for slack time"
- Uses explicit admission control
- Actual scheduling is easy ($\sim$200 lines C)

Virtual Memory Management

- Limited physical memory (DRAM), need space for:
  - operating system image
  - processes (text, data, heap, stack, . . .)
  - I/O buffers
- Memory management subsystem deals with:
  - Support for address binding (i.e. loading, dynamic linking).
  - Allocation of limited physical resources.
  - Protection & sharing of 'components'.
  - Providing convenient abstractions.
- Quite complex to implement:
  - processor-, motherboard-specific.
  - trade-offs keep shifting.
- Coming up in this section:
  - virtual addresses and address translation,
  - demand paged virtual memory management,
  - 2 case studies (Unix and VMS), and
  - a few other VM-related issues.

Logical vs Physical Addresses (1)

Old systems directly accessed [physical] memory, which caused some problems, e.g.

- Contiguous allocation:
  - need large lump of memory for process
  - with time, get [external] fragmentation

  $\Rightarrow$ require expensive compaction
- Address binding (i.e. dealing with *absolute* addressing):
  - "`int x; x = 5;`" $\rightarrow$ "`movl $0x5, ????`"
  - compile time $\Rightarrow$ must know load address.
  - load time $\Rightarrow$ work every time.
  - what about swapping?
- Portability:
  - how much memory should we assume a "standard" machine will have?
  - what happens if it has less? or more?

Can avoid lots of problems by separating concept of *logical* (or virtual) and *physical* addresses.

Logical vs Physical Addresses (2)

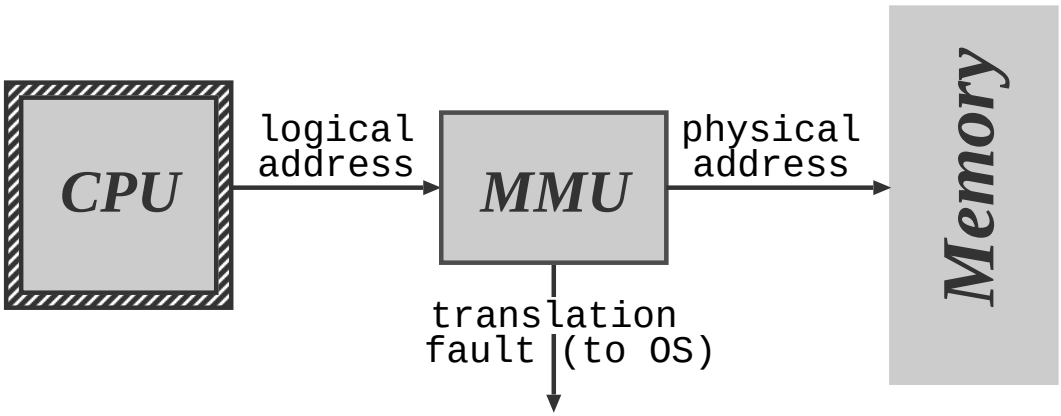

Run time mapping from logical to physical addresses performed by special hardware (the MMU).

If we make this mapping a *per process* thing then:

- Each process has own *address space*.
- Allocation problem split:
  - virtual address allocation easy.
  - allocate physical memory 'behind the scenes'.
- Address binding solved:
  - bind to logical addresses at compile-time.
  - bind to real addresses at load time/run time.

Two variants: segmentation and paging.

Segmentation

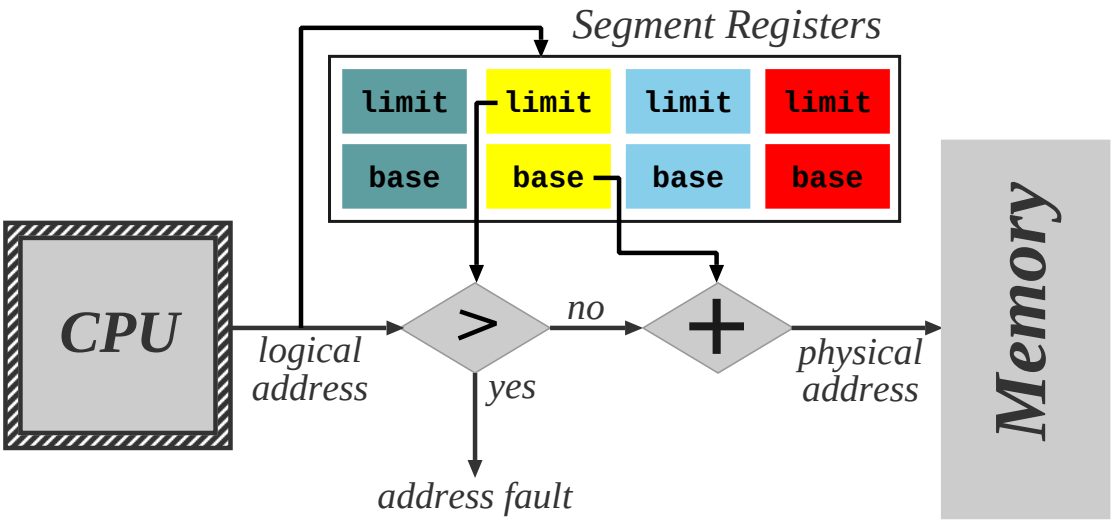

- MMU has a set (≥ 1) of segment registers (e.g. orig x86 had four: `cs`, `ds`, `es` and `ss`).
- CPU issues tuple (s, o):
  1. MMU selects segment s.
  2. Checks $o \leq$ `limit`.
  3. If ok, forwards `base`$+o$ to memory controller.
- Typically augment translation information with *protection bits* (e.g. read, write, execute, etc.)
- Overall, nice logical view (protection & sharing)
- Problem: still have [external] fragmentation.

Paging

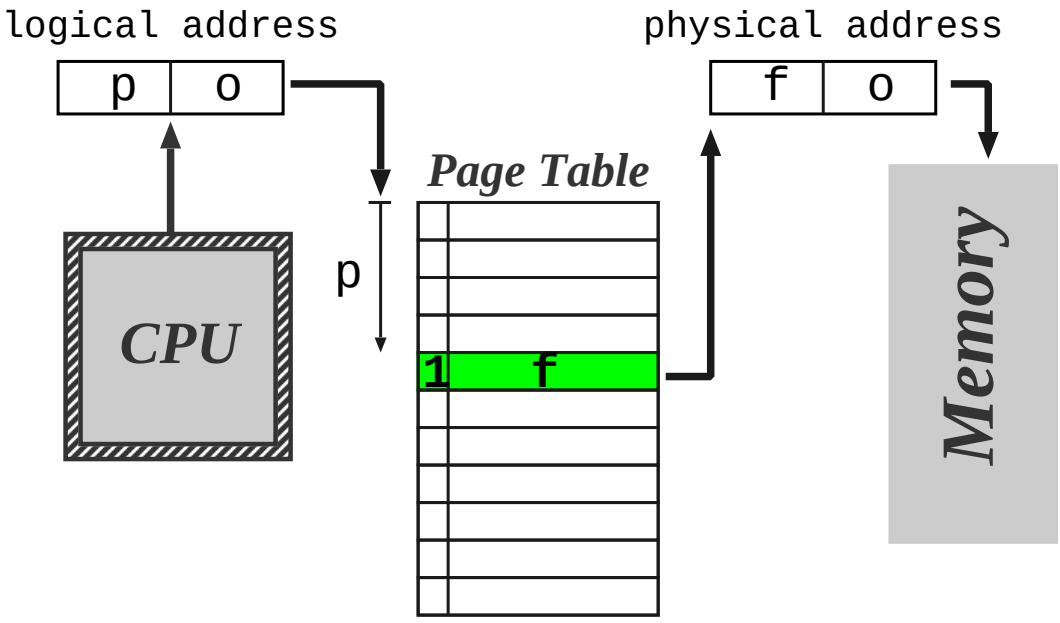

1. Physical memory: f frames each 2^s bytes.
2. Virtual memory: p pages each 2^s bytes.
3. *Page table* maps $\{0, \ldots, p-1\} \rightarrow \{0, \ldots, f-1\}$
4. Allocation problem has gone away!

Typically have $p \gg f \Rightarrow$ add *valid* bit to say if a given page is represented in physical memory.

- Problem: now have *internal* fragmentation.
- Problem: protection/sharing now per page.

Segmentation versus Paging

	logical view	allocation
Segmentation	✔	✘
Paging	✘	✔

⇒ try combined scheme.

- E.g. *paged segments* (Multics, OS/2)
  - divide each segment s_i into $k = \lceil l_i/2^n \rceil$ pages, where l_i is the limit (length) of the segment.
  - have page table per segment.

  ✘ high hardware cost / complexity.

  ✘ not very portable.
- E.g. *software segments* (most modern OSs)
  - consider pages $[m, \ldots, m + l]$ to be a segment.
  - OS must ensure protection / sharing kept consistent over region.

  ✘ loss in granularity.

  ✔ relatively simple / portable.

Translation Lookaside Buffers

Typically #pages large ⇒ page table lives in memory.
Add TLB, a fully associative cache for mapping info:

- Check each memory reference in TLB first.
- If miss ⇒ need to load info from page table:
  - may be done in h/w or s/w (by OS).
  - if full, replace entry (usually h/w)
- Include protection info ⇒ can perform access check in parallel with translation.
- Context switch requires [expensive] flush:
  - can add process tags to improve performance.
  - "global" bit useful for wide sharing.
- Use *superpages* for large regions.
- So TLB contains n entries something like:

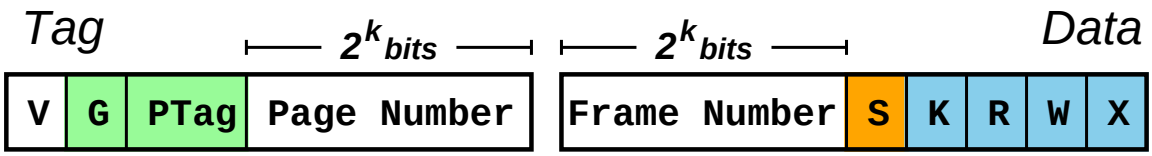

Most parts also present in *page table entries* (PTEs).

Multi-Level Page Tables

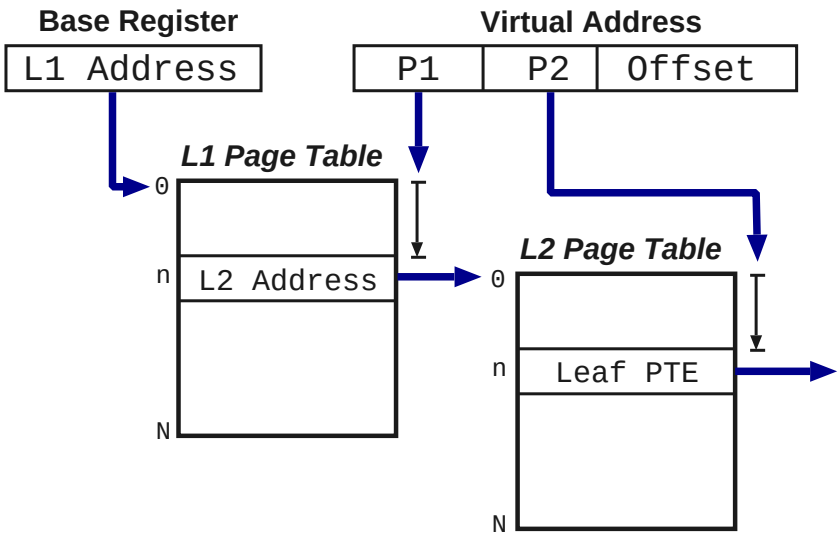

- Modern systems have 2^{32} or 2^{64} byte VAS $\Rightarrow$ have between 2^{22} and 2^{42} pages (and hence PTEs).
- Solution: use N-ary tree (N large, 256–4096)
- Keep PTBR per process and context switch.
- Advantages: easy to implement; cache friendly.
- Disadvantages:
  - Potentially poor space overhead.
  - Inflexibility: superpages, residency.
  - Require $d \geq 2$ memory references.

Linear Page Tables

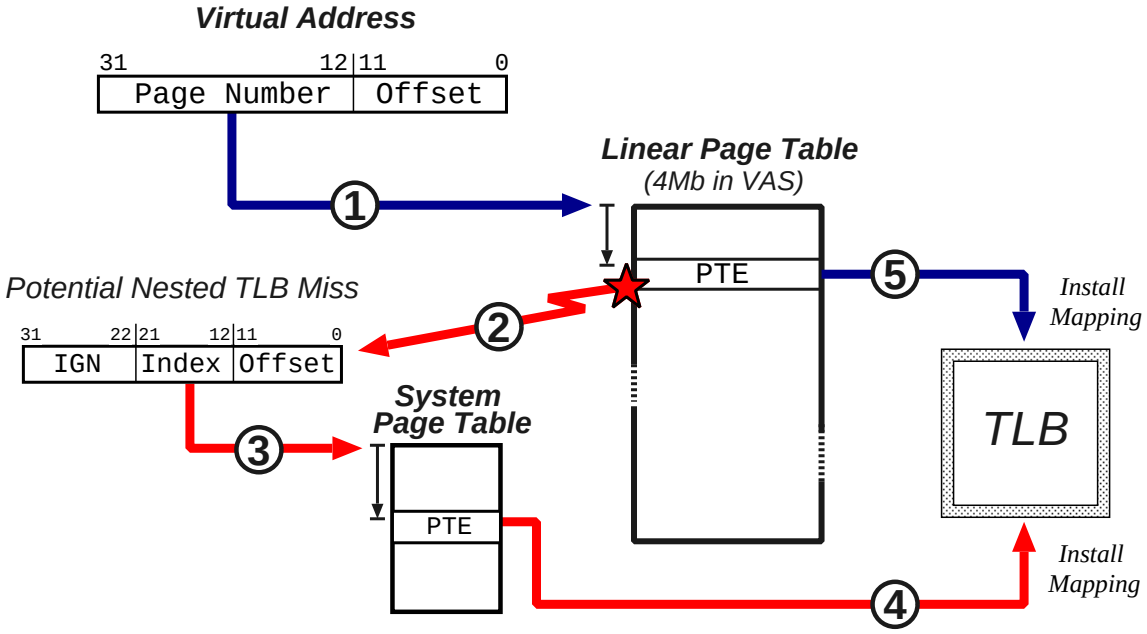

- Modification of MPTs:
  - typically implemented in software
  - pages of LPT translated on demand
  - i.e. stages ②, ③ and ④ not always needed.
- Advantages:
  - can require just 1 memory reference.
  - (initial) miss handler simple.
- But doesn't fix sparsity / superpages.
- *Guarded page tables* (≈ tries) claim to fix these.

Inverted Page Tables

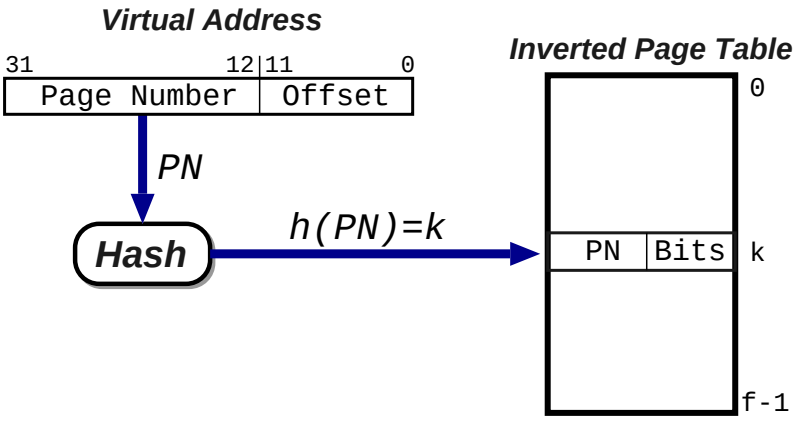

- Recall $f \ll p \rightarrow$ keep entry per $frame$.
- Then table size bounded by physical memory!
- IPT: frame number is `h(pn)`

✔ only one memory reference to translate.

✔ no problems with sparsity.

✔ can easily augment with process tag.

✘ no option on which frame to allocate

✘ dealing with collisions.

✘ cache unfriendly.

Hashed Page Tables

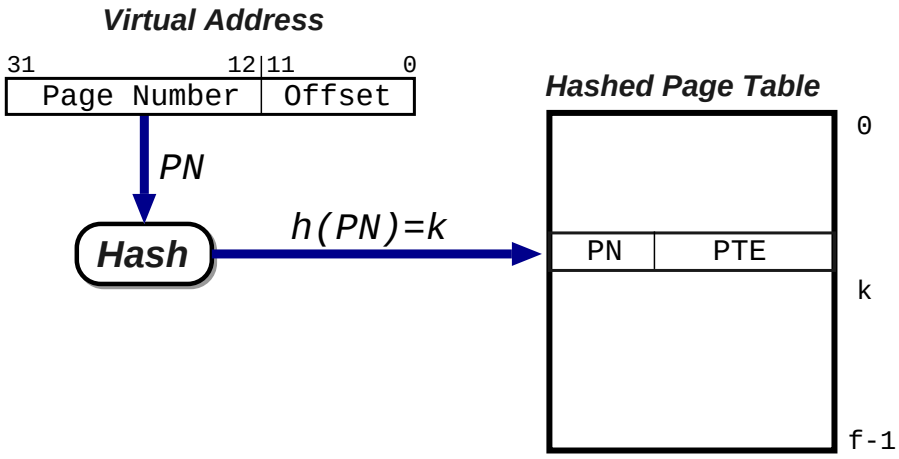

- HPT: simply extend IPT into proper hash table.
- i.e. make frame number explicit.
  - ✔ can map to any frame.
  - ✔ can choose table size.
  - ✘ table now bigger.
  - ✘ sharing still hard.
  - ✘ still cache unfriendly, no superpages.
- Can solve these last with *clustered page tables*.

Virtual Memory

- Virtual addressing allows us to introduce the idea of *virtual memory*:
  - already have valid or invalid page translations; introduce new "non-resident" designation
  - such pages live on a non-volatile *backing store*
  - processes access non-resident memory just as if it were 'the real thing'.
- Virtual memory (VM) has a number of benefits:
  - *portability*: programs work regardless of how much actual memory present
  - *convenience*: programmer can use e.g. large sparse data structures with impunity
  - *efficiency*: no need to waste (real) memory on code or data which isn't used.
- VM typically implemented via *demand paging*:
  - programs (executables) reside on disk
  - to execute a process we load pages in *on demand*; i.e. as and when they are referenced.
- Also get *demand segmentation*, but rare.

Demand Paging Details

When loading a new process for execution:

- create its address space (e.g. page tables, etc)
- mark PTEs as either "invalid or "non-resident"
- add PCB to scheduler.

Then whenever we receive a *page fault*:

1. check PTE to determine if "invalid" or not
2. if an invalid reference ⇒ kill process;
3. otherwise 'page in' the desired page:
   - find a free frame in memory
   - initiate disk I/O to read in the desired page
   - when I/O is finished modify the PTE for this page to show that it is now valid
   - restart the process at the faulting instruction

Scheme described above is *pure* demand paging:

- never brings in a page until required ⇒ get lots of page faults and I/O when process begins.
- hence many real systems explicitly load some core parts of the process first

Page Replacement

- When paging in from disk, we need a free frame of physical memory to hold the data we're reading in.
- In reality, size of physical memory is limited ⇒
  - need to discard unused pages if total demand for pages exceeds physical memory size
  - (alternatively could swap out a whole process to free some frames)
- Modified algorithm: on a page fault we
  1. locate the desired replacement page on disk
  2. to select a free frame for the incoming page:
     (a) if there is a free frame use it
     (b) otherwise select a *victim page* to free,
     (c) write the victim page back to disk, and
     (d) mark it as invalid in its process page tables
  3. read desired page into freed frame
  4. restart the faulting process
- Can reduce overhead by adding a 'dirty' bit to PTEs (can potentially omit step 2c above)
- Question: how do we choose our victim page?

Page Replacement Algorithms

- First-In First-Out (FIFO)
  - keep a queue of pages, discard from head
  - performance difficult to predict: no idea whether page replaced will be used again or not
  - discard is independent of page use frequency
  - in general: pretty bad, although very simple.
- Optimal Algorithm (OPT)
  - replace the page which will not be used again for longest period of time
  - can only be done with an oracle, or in hindsight
  - serves as a good comparison for other algorithms
- Least Recently Used (LRU)
  - LRU replaces the page which has not been used for the longest amount of time
  - (i.e. LRU is OPT with -ve time)
  - assumes past is a good predictor of the future
  - Q: how do we determine the LRU ordering?

Implementing LRU

- Could try using *counters*
  - give each page table entry a time-of-use field and give CPU a logical clock (counter)
  - whenever a page is referenced, its PTE is updated to clock value
  - replace page with smallest time value
  - problem: requires a search to find min value
  - problem: adds a write to memory (PTE) on every memory reference
  - problem: clock overflow
- Or a *page stack*:
  - maintain a stack of pages (doubly linked list) with most-recently used (MRU) page on top
  - discard from bottom of stack
  - requires changing 6 pointers per [new] reference
  - very slow without extensive hardware support
- Neither scheme seems practical on a standard processor $\Rightarrow$ need another way.

Approximating LRU (1)

- Many systems have a *reference bit* in the PTE which is set by h/w whenever the page is touched
- This allows *not recently used* (NRU) replacement:
  - periodically (e.g. 20ms) clear all reference bits
  - when choosing a victim to replace, prefer pages with clear reference bits
  - if also have a *modified bit* (or *dirty bit*) in the PTE, can extend MRU to use that too:

Ref?	Dirty?	Comment
no	no	best type of page to replace
no	yes	next best (requires writeback)
yes	no	probably code in use
yes	yes	bad choice for replacement

- Or can extend by maintaining more history, e.g.
  - for each page, the operating system maintains an 8-bit value, initialized to zero
  - periodically (e.g. 20ms) shift reference bit onto high order bit of the byte, and clear reference bit
  - select lowest value page (or one of) to replace

Approximating LRU (2)

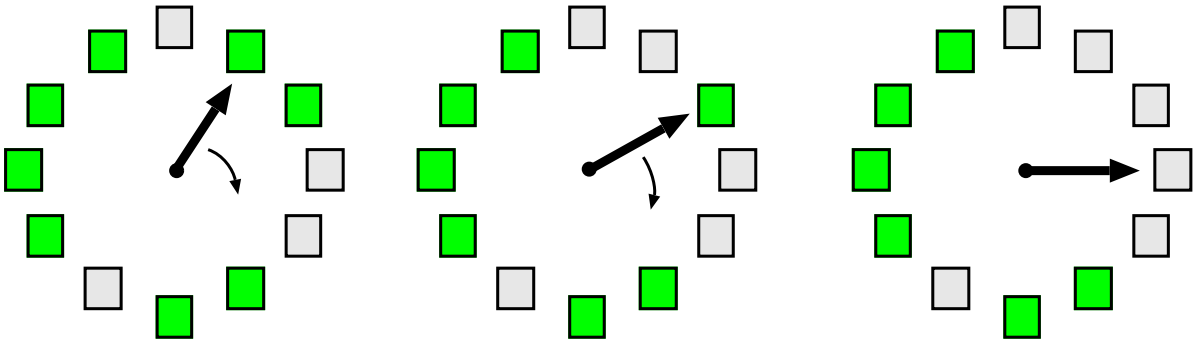

- Popular NRU scheme: *second-chance FIFO*
  - store pages in queue as per FIFO
  - before discarding head, check its reference bit
  - if reference bit is 0, discard, otherwise:
    - reset reference bit, and
    - add page to tail of queue
    - i.e. give it "a second chance"
- Often implemented with a circular queue and a current pointer; in this case usually called *clock*.
- If no h/w provided reference bit can emulate:
  - to clear "reference bit", mark page no access
  - if referenced ⇒ trap, update PTE, and resume
  - to check if referenced, check permissions
  - can use similar scheme to emulate modified bit

Other Replacement Schemes

- Counting Algorithms: keep a count of the number of references to each page
  - LFU: replace page with smallest count
  - MFU: replace highest count because low count $\Rightarrow$ most recently brought in.
- Page Buffering Algorithms:
  - keep a min. number of victims in a free pool
  - new page read in before writing out victim.
- (Pseudo) MRU:
  - consider access of e.g. large array.
  - page to replace is one application has *just finished with*, i.e. most recently used.
  - e.g. track page faults and look for sequences.
  - discard the kth in victim sequence.
- Application-specific:
  - stop trying to second guess what's going on.
  - provide hook for app. to suggest replacement.
  - must be careful with denial of service. . .

Performance Comparison

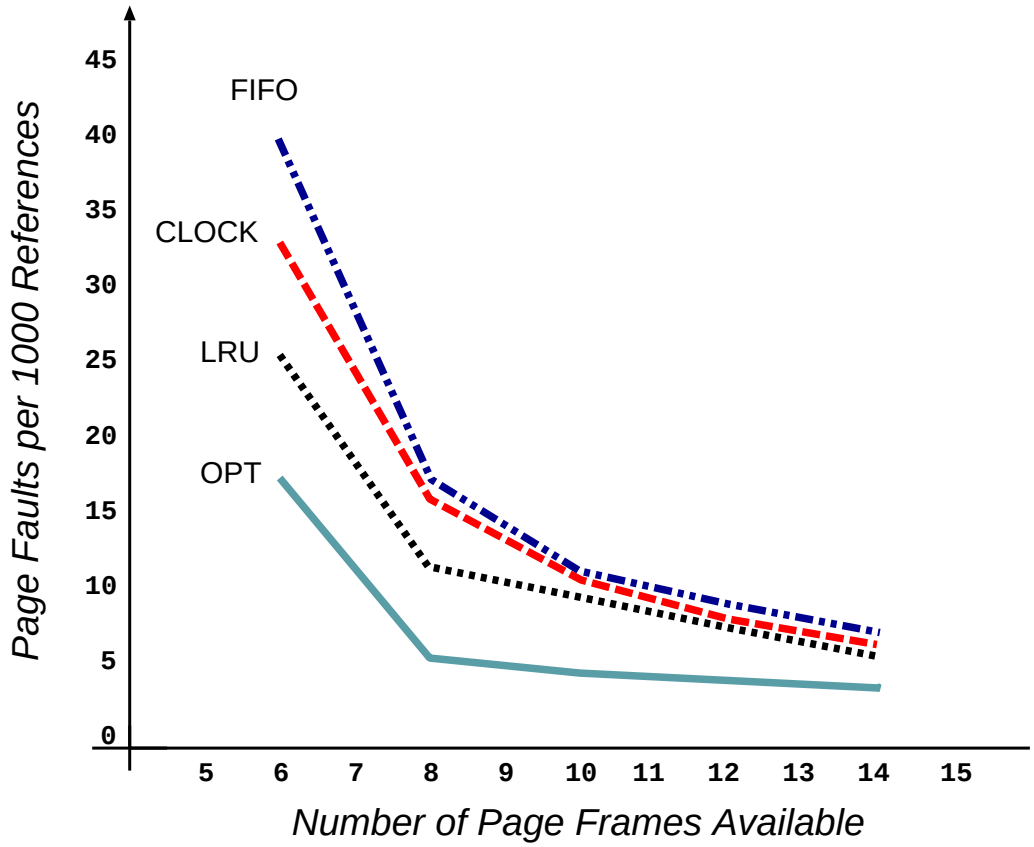

Graph plots page-fault rate against number of physical frames for a pseudo-local reference string.

- want to minimise area under curve
- FIFO can exhibit Belady's anomaly (although it doesn't in this case)
- getting frame allocation right has major impact. . .

Frame Allocation

- A certain fraction of physical memory is reserved per-process and for core OS code and data.
- Need an *allocation policy* to determine how to distribute the remaining frames.
- Objectives:
  - Fairness (or proportional fairness)?
    - e.g. divide m frames between n processes as m/n, with remainder in the free pool
    - e.g. divide frames in proportion to size of process (i.e. number of pages used)
  - Minimize system-wide page-fault rate? (e.g. allocate all memory to few processes)
  - Maximize level of multiprogramming? (e.g. allocate min memory to many processes)
- Most page replacement schemes are *global*: all pages considered for replacement.

$\Rightarrow$ allocation policy implicitly enforced during page-in:

- allocation succeeds iff policy agrees
- 'free frames' often in use $\Rightarrow$ steal them!

The Risk of Thrashing

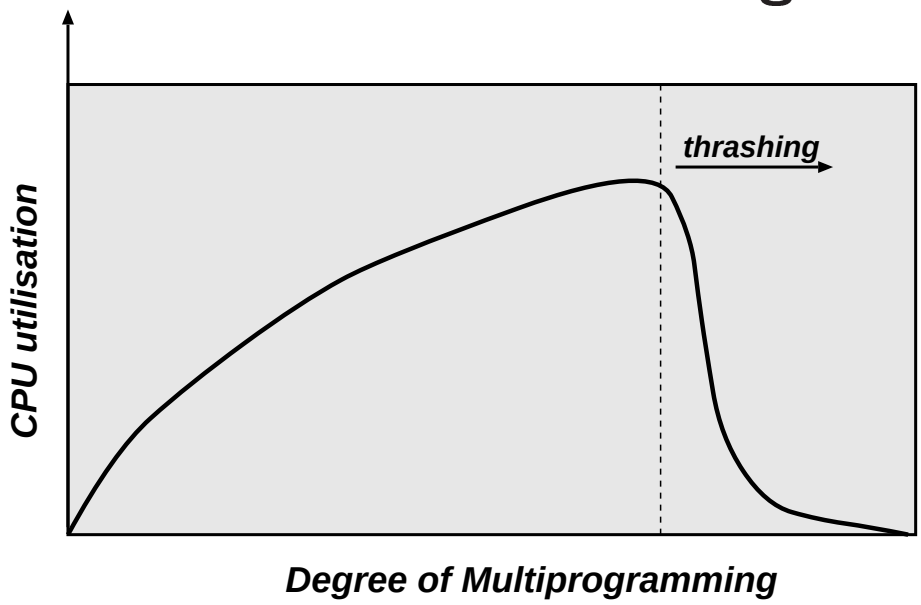

- As more processes enter the system, the frames-per-process value can get very small.
- At some point we hit a wall:
  - a process needs more frames, so steals them
  - but the other processes need those pages, so they fault to bring them back in
  - number of runnable processes plunges
- To avoid thrashing we must give processes as many frames as they "need"
- If we can't, we need to reduce the MPL (a better page-replacement algorithm will not help)

Locality of Reference

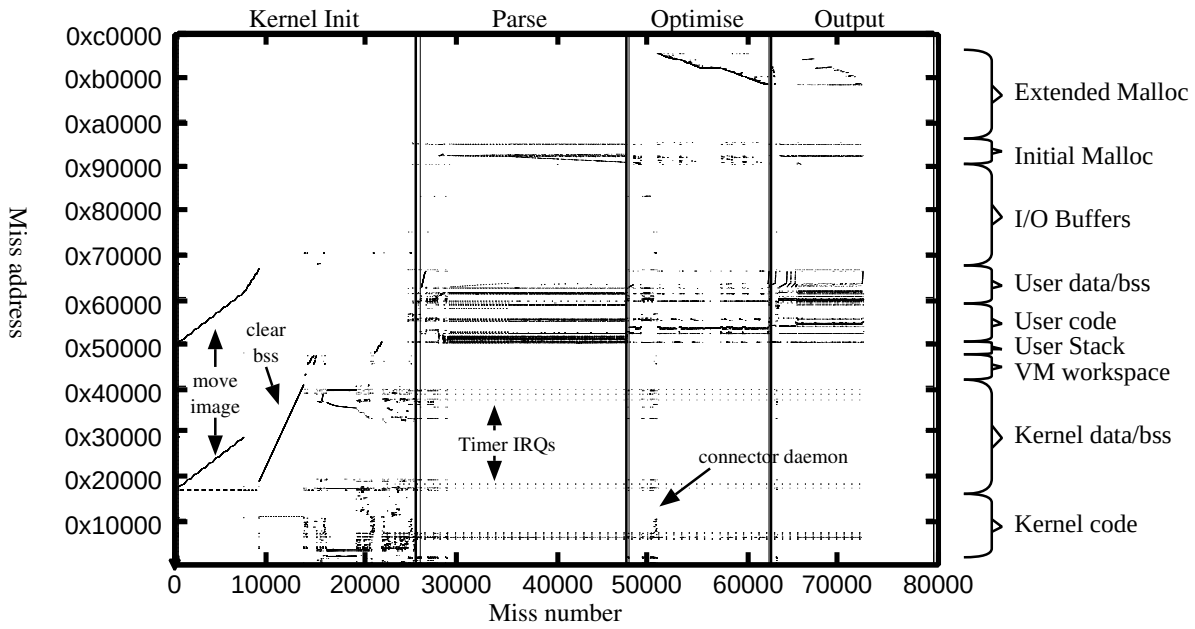

Locality of reference: in a short time interval, the locations referenced by a process tend to be grouped into a few regions in its address space.

- procedure being executed
- . . . sub-procedures
- . . . data access
- . . . stack variables

Note: have locality in both space and time.

Avoiding Thrashing

We can use the locality of reference principle to help determine how many frames a process needs:

- define the *Working Set* (Denning, 1967)
  - set of pages that a process needs in store at "the same time" to make any progress
  - varies between processes and during execution
  - assume process moves through $phases$
  - in each phase, get (spatial) locality of reference
  - from time to time get $phase\ shift$
- Then OS can try to prevent thrashing by maintaining sufficient pages for current phase:
  - sample page reference bits every e.g. 10ms
  - if a page is "in use", say it's in the working set
  - sum working set sizes to get total demand D
  - if $D > m$ we are in danger of thrashing $\Rightarrow$ suspend a process
- Alternatively use page fault frequency (PFF):
  - monitor per-process page fault rate
  - if too high, allocate more frames to process

Other Performance Issues

Various other factors influence VM performance, e.g.

- Program structure: consider for example

```
for(j=0; j<1024; j++)
    for(i=0; i<1024; i++)
        array[i][j] = 0;
```

  - a killer on a system with 1024 word pages; either have all pages resident, or get 2^{20} page faults.
  - if reverse order of iteration (i,j) then works fine

- Language choice:
  - ML, lisp: use lots of pointers, tend to randomise memory access $\Rightarrow$ kills spatial locality
  - Fortran, C, Java: relatively few pointer refs

- Pre-paging:
  - avoid problem with pure demand paging
  - can use WS technique to work out what to load

- Real-time systems:
  - no paging in hard RT (must lock all pages)
  - for SRT, trade-offs may be available

Case Study 1: Unix

- Swapping allowed from very early on.
- Kernel Per-process info. split into two kinds:
  - `proc` and `text` structures always resident.
  - page tables, `user` structure and kernel stack could be swapped out.
- Swapping performed by special process: the *swapper* (usually process 0).
  - periodically awaken and inspect processes on disk.
  - choose one waiting longest time and prepare to swap in.
  - victim chosen by looking at scheduler queues: try to find process blocked on I/O.
  - other metrics: priority, overall time resident, time since last swap in (for stability).
- From 3BSD / SVR2 onwards, implemented demand paging.
- Today swapping only used when dire shortage of physical memory.

Unix: Address Space

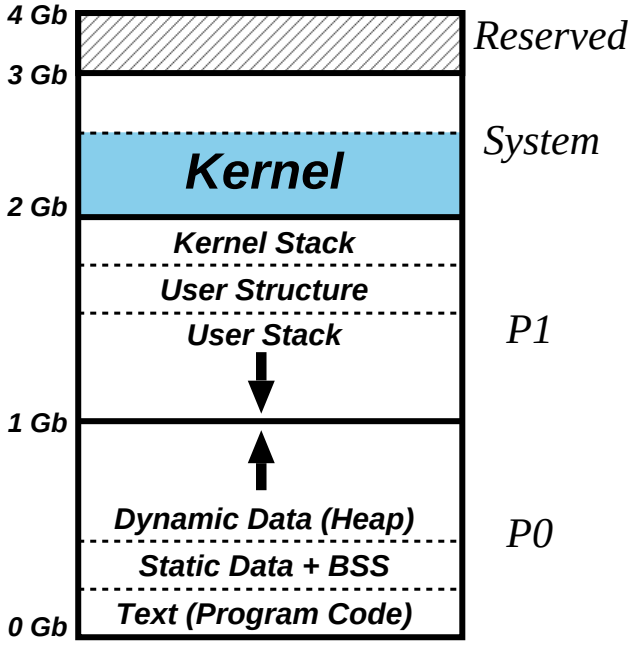

4.3 BSD UNIX address space borrows from VAX:

- 0Gb–1Gb: segment $P0$ (text/data, grow upward)
- 1Gb–2Gb: segment $P1$ (stack, grows downward)
- 2Gb–3Gb: $system$ segment (for kernel).

Address translation done in hardware LPT:

- System page table always resident.
- $P0$, $P1$ page tables in system segment.
- Segments have page-aligned length.

Unix: Page Table Entries

	VLD			FOD	FS		
	31	30 27	26	25	24	23 21	20 0
Resident	1	AXS	M	0	x	xxx	Frame Number
Demand Zero	0	AXS	x	1	0	xxxx.....xxxx	
Fill from File	0	AXS	x	1	1	Block Number	
Transit/Sampling	0	AXS	M	0	x	xxx	Frame Number
On backing store	0	AXS	x	0	x	0000.....0000	

- PTEs for valid pages determined by h/w.
- If valid bit not set ⇒ use up to OS.
- BSD uses FOD bit, FS bit and the $block\ number$.
- First pair are "fill on demand":
  - DZ used for BSS, and growing stack.
  - FFF used for executables (text & data).
  - Simple pre-paging implemented via $klusters$.
- Sampling used to simulate reference bit.
- Backing store pages located via $swap\ map$(s).

Unix: Paging Dynamics

- Physical memory managed by *core map*:
  - array of structures, one per *cluster*.
  - records if free or in use and [potentially] the associated page number and disk block.
  - *free list* threads through core map.
- Page replacement carried out by the *page dæmon*.
  - every 250ms, OS checks if "enough' (viz. `lotsfree`) physical memory free.
  - if not ⇒ wake up page dæmon.
- Basic algorithm: global [two-handed] clock:
  - hands point to different entries in core map
  - first check if can replace front cluster; if not, clear its "reference bit" (viz. mark invalid).
  - then check if back cluster referenced (viz. marked valid); if so given second chance.
  - else flush to disk (if necessary), and put cluster onto end of free list.
  - move hands forward and repeat. . .
- System V Unix uses an almost identical scheme. . .

Case Study 2: VMS

- VMS released in 1978 to run on the VAX-11/780.
- Aimed to support a wide range of hardware, and a job mix of real-time, timeshared and batch tasks.
- This led to a design with:
  - A *local* page replacement scheme,
  - A *quota* scheme for physical memory, and
  - An aggressive *page clustering* policy.
- First two based around idea of *resident set*:
  - simply the set of pages which a given process currently has in memory.
  - each process also has a *resident-set limit*.
- Then during execution:
  - pages faulted in by pager on demand.
  - once hit limit, choose victim from resident set.

  $\Rightarrow$ minimises impact on others.
- Also have swapper for extreme cases.

VMS: Paging Dynamics

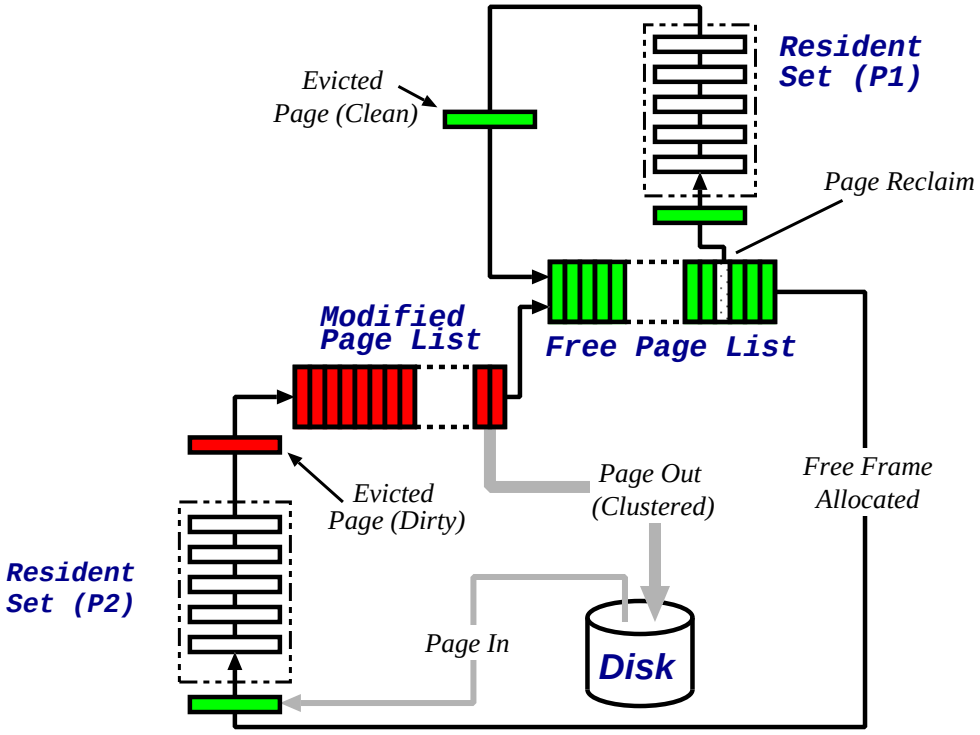

- Basic algorithm: simple [local] FIFO.
- Suckful ⇒ augment with software "victim cache":
  - Victim pages placed on tail of FPL/MPL.
  - On fault, search lists before do I/O.
- Lists also allow aggressive *page clustering*:
  - if |MPL| ≥ `hi`, write (|MPL|− `lo`) pages.
  - Get ∼100 pages per write on average.

VMS: Other Issues

- Modified page replacement:
  - introduce *callback* for privileged processes.
  - prefer to retain pages with TLB entries.
- Automatic resident set limit adjustment:
  - system counts #page faults per process.
  - at quantum end, check if rate $>$ `PFRATH`.
  - if so and if "enough" memory $\Rightarrow$ increase RSL.
  - *swapper trimming* used to reduce RSLs again.
  - NB: real-time processes are exempt.
- Other system services:
  - `$SETSWM`: disable process swapping.
  - `$LCKPAG`: lock pages into memory.
  - `$LKWSET`: lock pages into resident set.
- VMS still alive:
  - recent versions updated to support 64-bit address space
  - son-of-VMS aka Win2K/XP also going strong.

Other VM Techniques

Once have MMU, can (ab)use for other reasons

- Assume OS provides:
  - system calls to change memory protections.
  - some way to "catch" memory exceptions.
- This enables a large number of applications.
- e.g. concurrent garbage collection:
  - mark unscanned areas of heap as no-access.
  - if mutator thread accesses these, trap.
  - on trap, collector scans page(s), copying and forwarding as necessary.
  - finally, resume mutator thread.
- e.g. incremental checkpointing:
  - at time t atomically mark address space read-only.
  - on each trap, copy page, mark r/w and resume.
  - ✔ no significant interruption.
  - ✔ more space efficient

Single Address Space Operating Systems

- Emerging large (64-bit) address spaces mean that having a SVAS is plausible once more.
- Separate concerns of "what we can see" and "what we are allowed to access".
- Advantages: easy sharing (unified addressing).
- Problems:
  - address binding issues return.
  - cache/TLB setup for MVAS model.
- Distributed shared virtual memory:
  - turn a NOW into a SMP.
  - how seamless do you think this is?
- Persistent object stores:
  - support for pickling & compression?
  - garbage collection?
- Sensible use requires restraint. . .

Disk I/O

- Performance of disk I/O is crucial to swapping/paging and file system operation
- Key parameters:
  1. wait for controller and disk.
  2. seek to appropriate disk cylinder
  3. wait for desired block to come under the head
  4. transfer data to/from disk
- Performance depends on *how the disk is organised*

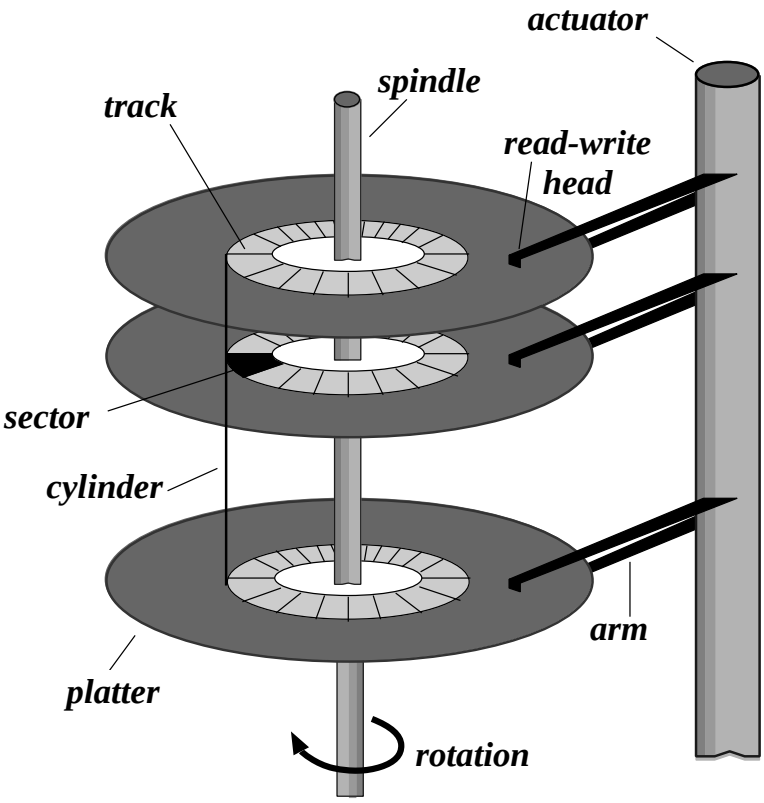

Disk Scheduling

- In a typical multiprogramming environment have multiple users queueing for access to disk
- Also have VM system requests to load/swap/page processes/pages
- We want to provide best performance to all users — specifically reducing seek time component
- Several policies for scheduling a set of disk requests onto the device, e.g.

  1. FIFO: perform requests in their arrival order
  2. SSTF: if the disk controller knows where the head is (hope so!) then it can schedule the request with the shortest seek from the current position
  3. SCAN ("elevator algorithm"): relieves problem that an unlucky request could receive bad performance due to queue position
  4. C-SCAN: scan in one direction only
  5. N-step-SCAN and FSCAN: ensure that the disk head always moves

Reference String = `55,58,39,18,90,160,150,38,184`

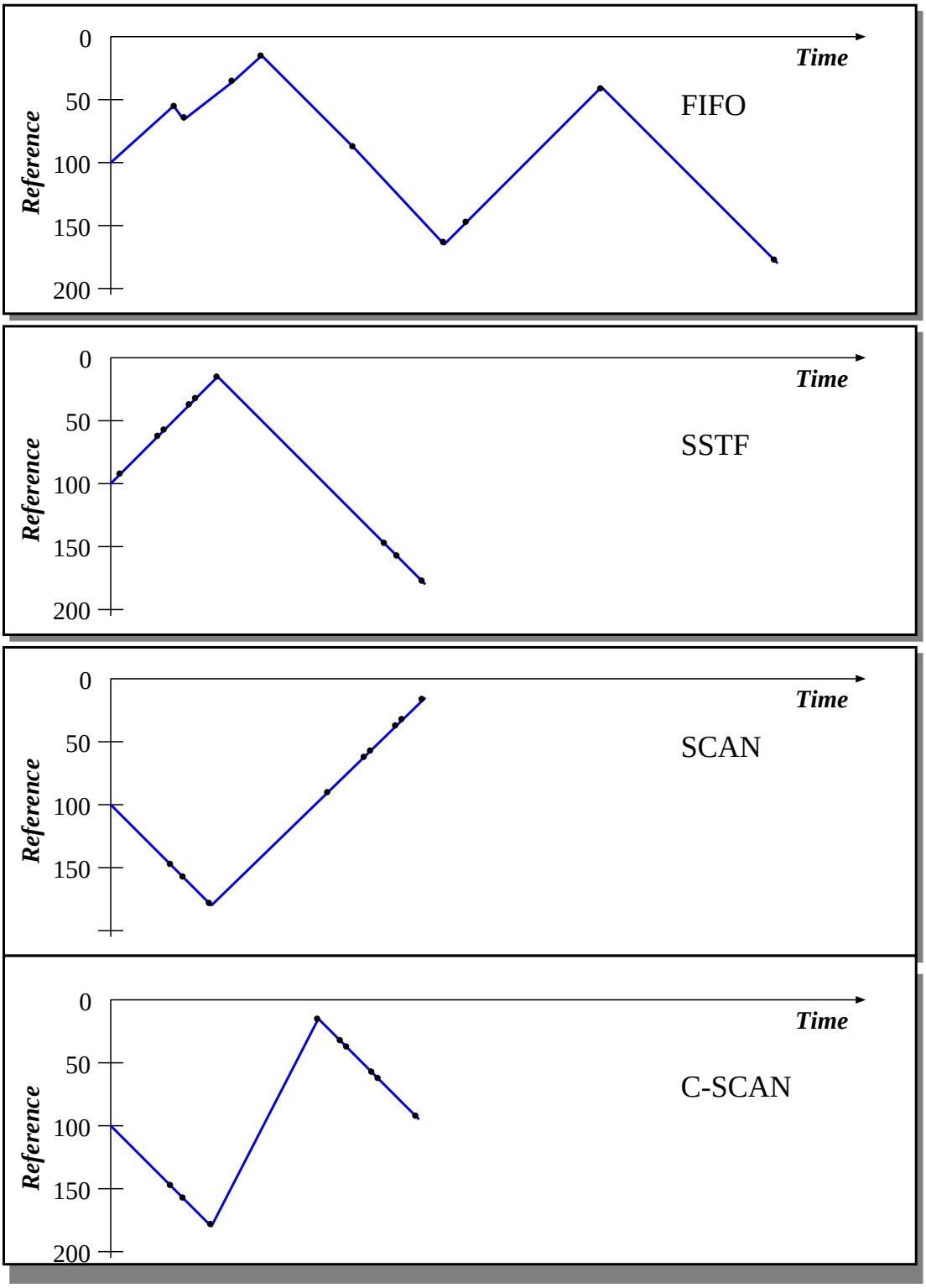

Other Disk Scheduling Issues

- Priority: usually beyond disk controller's control.
  - system decides to prioritise, for example by ensuring that swaps get done before I/O.
  - alternatively interactive processes might get greater priority over batch processes.
  - or perhaps short requests given preference over larger ones (avoid "convoy effect")
- SRT disk scheduling (e.g. Cello, USD):
  - per client/process scheduling parameters.
  - two stage: admission, then queue.
  - problem: overall performance?
- 2-D Scheduling (e.g. SPTF).
  - try to reduce rotational latency.
  - typically require h/w support.
- Bad blocks remapping:
  - typically transparent $\Rightarrow$ can potentially undo scheduling benefits.
  - some SCSI disks let OS into bad-block story

Logical Volumes

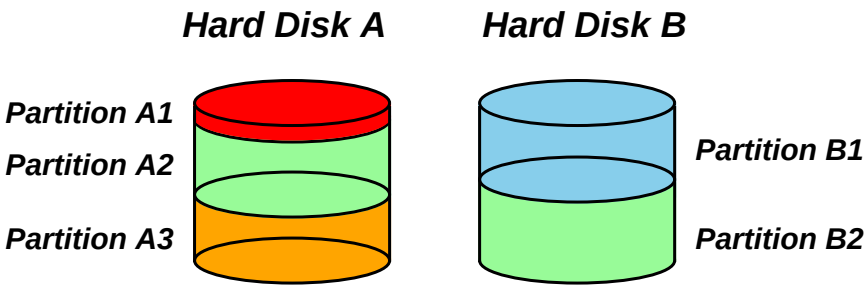

Modern OSs tend to abstract away from physical disk; instead use *logical volume* concept.

- Partitions first step.
- Augment with "soft partitions":
  - allow v. large number of partitions on one disk.
  - can customize, e.g. "real-time" volume.
  - aggregation: can make use of v. small partitions.
- Overall gives far more flexibility:
  - e.g. dynamic resizing of partitions
  - e.g. *striping* for performance.
- E.g. IRIX `xlm`, OSF/1 `lvm`, NT `FtDisk`.
- Other big opportunity is *reliability*. . .

RAID

RAID = **R**edundant **A**rray of **I**nexpensive **D**isks:

- Uses various combinations of striping and *mirroring* to increase performance.
- Can implement (some levels) in h/w or s/w
- Many levels exist:
  - RAID0: striping over n disks (so actually !**R**)
  - RAID1: simple mirroring, i.e. write n copies of data to n disks (where n is 2 ;-).
  - RAID2: hamming ECC (for disks with no built-in error detection)
  - RAID3: stripe data on multiple disks and keep parity on a dedicated disk. Done at byte level $\Rightarrow$ need spindle-synchronised disks.
  - RAID4: same as RAID3, but block level.
  - RAID5: same as RAID4, but no dedicated parity disk (round robin instead).
- AutoRAID trades off RAIDs 1 and 5.
- Even funkier stuff emerging. . .

Disk Caching

- Cache holds copy of some of disk sectors.
- Can reduce access time by applications if the required data follows the locality principle
- Design issues:
  - transfer data by DMA or by shared memory?
  - replacement strategy: LRU, LFU, etc.
  - reading ahead: e.g. track based.
  - write through or write back?
  - partitioning? (USD. . .)
- Typically O/S also provides a cache in s/w:
  - may be done per volume, or overall.
  - also get *unified* caches — treat VM and FS caching as part of the same thing.
- Software caching issues:
  - should we treat all filesystems the same?
  - do applications know better?

4.3 BSD Unix Buffer Cache

- Name? Well *buffers* data to/from disk, and *caches* recently used information.
- Modern Unix deals with *logical* blocks, i.e. FS block within a given partition / logical volume.
- "Typically" prevents 85% of implied disk transfers.
- Implemented as a hash table:
  - Hash on `(devno, blockno)` to see if present.
  - Linked list used for collisions.
- Also have **LRU** list (for replacement).
- Internal interface:
  - `bread()`: get data & lock buffer.
  - `brelse()`: unlock buffer (clean).
  - `bdwrite()`: mark buffer dirty (lazy write).
  - `bawrite()`: asynchronous write.
  - `bwrite()`: synchronous write.
- Uses `sync` every 30 secs for consistency.
- Limited prefetching (read-ahead).

NT/2K Cache Manager

- Cache Manager caches "virtual blocks":
  - viz. keeps track of cache "lines" as offsets within a *file* rather than a volume.
  - disk layout & volume concept abstracted away.

  ⇒ no translation required for cache hit.

  ⇒ can get more intelligent prefetching
- Completely unified cache:
  - cache "lines" all in virtual address space.
  - decouples physical & virtual cache systems: e.g.
    - virtually cache in 256K blocks,
    - physically *cluster* up to 64K.
  - NT virtual memory manager responsible for actually doing the I/O.
  - allows lots of FS cache when VM system lightly loaded, little when system is thrashing.
- NT/2K also provides some user control:
  - if specify `temporary` attrib when creating file ⇒ will never be flushed to disk unless necessary.
  - if specify `write_through` attrib when opening a file ⇒ all writes will synchronously complete.

File systems

What is a filing system?

Normally consider it to comprise two parts:

1. Directory Service: this provides
   - naming mechanism
   - access control
   - existence control
   - concurrency control
2. Storage Service: this provides
   - integrity, data needs to survive:
     - hardware errors
     - OS errors
     - user errors
   - archiving
   - mechanism to implement directory service

What is a file?

- an ordered sequence of bytes (UNIX)
- an ordered sequence of records (ISO FTAM)

File Mapping Algorithms

Need to be able to work out which disk blocks belong to which files ⇒ need a file-mapping algorithm, e.g.

1. chaining in the material
2. chaining in a map
3. table of pointers to blocks
4. extents

Aspects to consider:

- integrity checking after crash
- automatic recovery after crash
- efficiency for different access patterns
  - of data structure itself
  - of I/O operations to access it
- ability to extend files
- efficiency at high utilization of disk capacity

Chaining in the Media

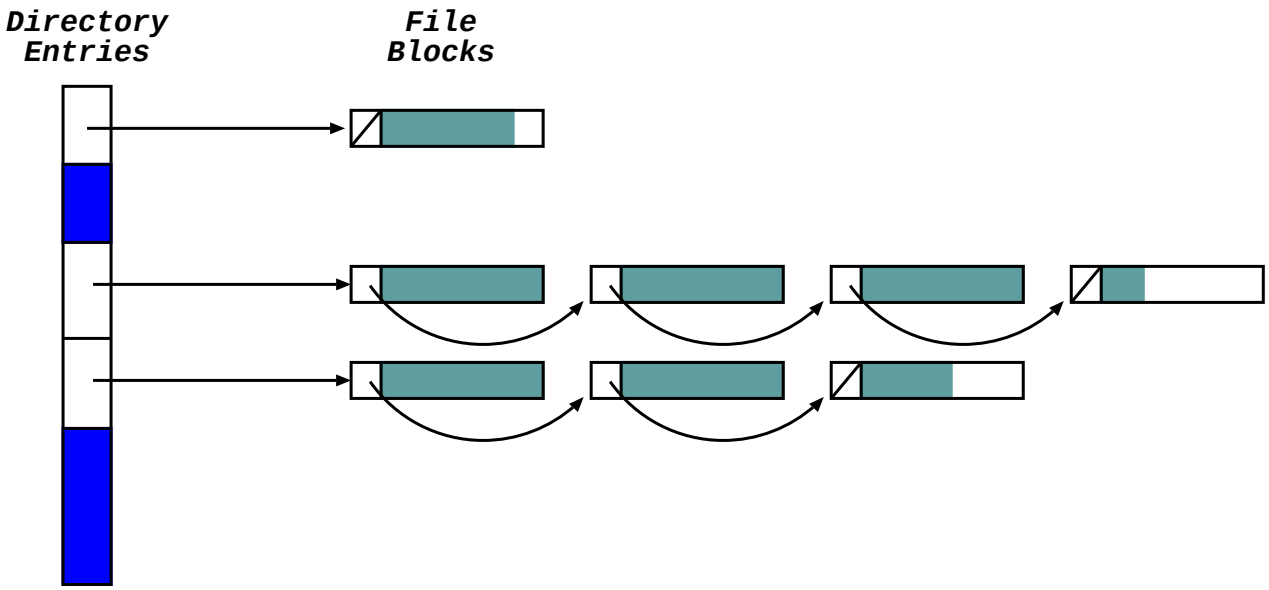

Each disk block has pointer to next block in file.
Can also chain free blocks.

- OK for sequential access – poor for random access
- cost to find disk address of block n in a file:
  - best case: n disk reads
  - worst case: n disk reads
- Some problems:
  - not all of file block is file info
  - integrity check tedious. . .

Chaining in a map

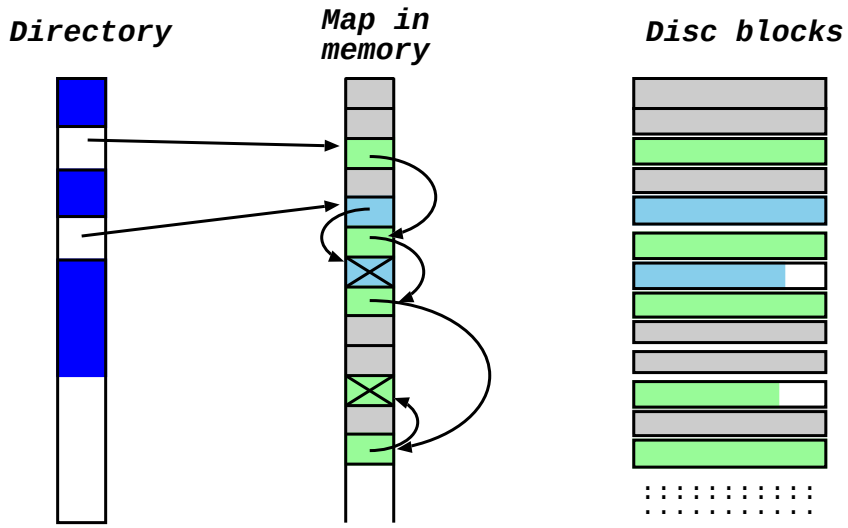

Maintain the chains of pointers in a map (in memory), mirroring disk structure.

- disk blocks only contain file information
- integrity check easy: only need to check map
- handling of map is critical for
  - performance: must cache bulk of it.
  - reliability: must replicate on disk.
- cost to find disk address of block n in a file:
  - best case: n memory reads
  - worst case: n disk reads

Table of pointers

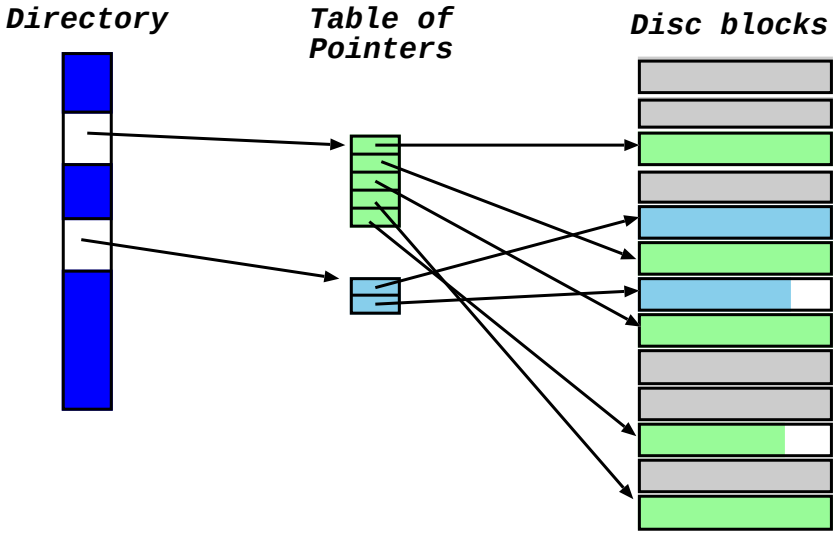

- access cost to find block n in a file
  - best case: 1 memory read
  - worst case: 1 disk read
- i.e. good for random access
- integrity check easy: only need to check tables
- free blocks managed independently (e.g. bitmap)
- table may get large $\Rightarrow$ must chain tables, or build a tree of tables (e.g. UNIX inode)
- access cost for chain of tables? for hierarchy?

Extent lists

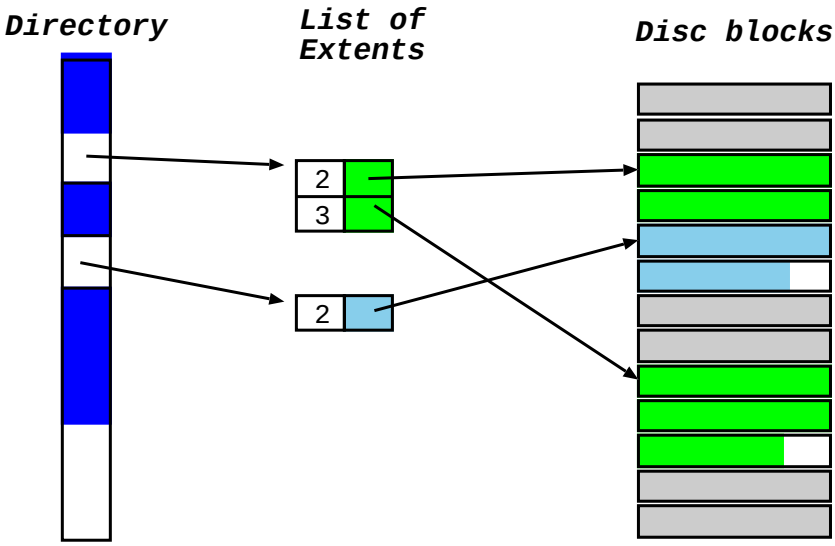

Using contiguous blocks can increase performance. . .

- list of disk addresses and lengths (extents)
- access cost: [perhaps] a disk read and then a searching problem, O(log(number of extents))
- can use bitmap to manage free space (e.g. QNX)
- system may have some maximum #extents
  - new error *can't extend file*
  - could copy file (i.e. compact into one extent)
  - or could chain tables or use a hierarchy as for table of pointers.

File Meta-Data (1)

What information is held about a file?

- times: creation, access and change?
- access control: who and how
- location of file data (see above)
- backup or archive information
- concurrency control

What is the name of a file?

- simple system: only name for file is human comprehensible text name
- perhaps want multiple text names for file
  - soft (symbolic) link: text name $\rightarrow$ text name
  - hard link: text name $\rightarrow$ file id
  - if we have hard links, must have reference counts on files

Together with the data structure describing the disk blocks, this information is known as the file *meta-data*.

File Meta-Data (2)

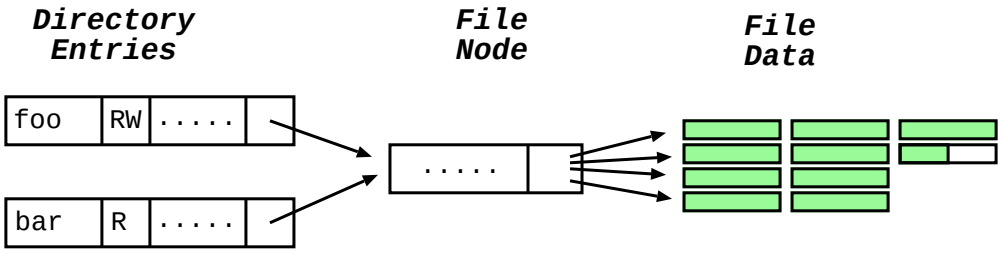

Where is file information kept?

- no hard links: keep it in the directory structure.
- if have hard links, keep file info separate from directory entries
  - file info in a block: OK if blocks small (e.g. TOPS10)
  - or in a table (UNIX i-node / v-node table)
- on OPEN, (after access check) copy info into memory for fast access
- on CLOSE, write updated file data and meta-data to disk

How do we handle *caching* meta-data?

Directory Name Space

- simplest — flat name space (e.g. Univac Exec 8)
- two level (e.g. CTSS, TOPS10)
- general hierarchy
  - a tree,
  - a directed (acyclic) graph (DAG)
- structure of name space often reflects data structures used to implement it
  - e.g. hierarchical name space $\leftrightarrow$ hierarchical data structures
  - but, could have hierarchical name space and huge hash table!

General hierarchy:

- reflects structure of organisation, users' files etc.
- name is full path name, but can get rather long:
  e.g. /usr/groups/X11R5/src/mit/server/os/4.2bsd/utils.c
  - offer relative naming
  - login directory
  - current working directory

Directory Implementation

- Directories often don't get very large (especially if access control is at the directory level rather than on individual files)

  ✔ often quick look up

  ✘ directories may be small compared to underlying allocation unit

- But: assuming small dirs means lookup is naïve ⇒ trouble if get big dirs:
  - optimise for iteration.
  - keep entries sorted (e.g. use a B-Tree).

- Query based access:
  - split filespace into system and user.
  - system wants fast lookup but doesn't much care about friendly names (or may actively dislike)
  - user wishes 'easy' retrieval ⇒ build content index and make searching the default lookup.
  - Q: how do we keep index up-to-date?
  - Q: what about access control?

File System Backups

- Backup: keep (recent) copy of whole file system to allow recovery from:
  - CPU software crash
  - bad blocks on disk
  - disk head crash
  - fire, war, famine, pestilence
- What is a *recent* copy?
  - in real time systems recent means mirrored disks
  - daily usually sufficient for 'normal' machines
- Can use *incremental* technique, e.g.
  - full dump performed daily or weekly
    - copy whole file system to another disk or tape
    - ideally can do it while file system live. . .
  - incremental dump performed hourly or daily
    - only copy files and directories which have changed since the last time.
    - e.g. use the file 'last modifed' time
  - to recover: first restore full dump, then sucessively add in incrementals

Ruler Function

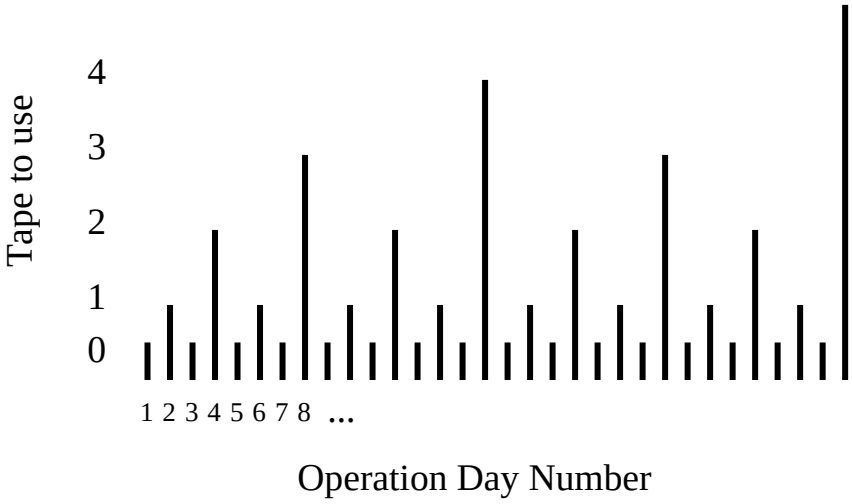

- Want to minimise #tapes needed, time to backup
- Want to maximise the time a file is held on backup
  - number days starting at 1
  - on day n use tape t such that 2^t is highest power of 2 which divides n
  - whenever we use tape t, dump all files modified since we last used that tape, or any tape with a higher number
- If file is created on day c and deleted on day d a dump version will be saved substantially after d
- the length of time it is saved depends on $d - c$ and the exact values of c, d

Crash Recovery

- Most failures affect only files being modified
- At start up after a crash run a *disk scavenger*:
  - try to recover data structures from memory (bring back core memory!)
  - get current state of data structures from disk
  - identify inconsistencies (may require operator intervention)
  - isolate suspect files and reload from backup
  - correct data structures and update disk
- Usually much faster and better (i.e. more recent) than recovery from backup.
- Can make scavenger's job simpler:
  - replicate vital data structures
  - spread replicas around the disk
- Even better: use *journal* file to assist recovery.
  - record all meta-data operations in an append-only [infinite] file.
  - ensure log records written before performing actual modification.

Immutable files

- Avoid concurrency problems: use write-once files.
  - multiple version numbers: foo!11, foo!12
  - invent new version number on close
- Problems:
  - disk space is not infinite
    - only keep last k versions (archive rest?)
    - have a explicit *keep* call
    - share disk blocks between different versions — complicated file system structures
  - what does name without version mean?
  - and the killer. . . directories aren't immutable!
- But:
  - only need concurrency control on version number
  - could be used (for files) on unusual media types
    - write once optical disks
    - remote servers (e.g. Cedar FS)
  - provides an audit trail
    - required by the spooks
    - often implemented on top of normal file system; e.g. UNIX RCS

Multi-level stores

Archiving (c.f. backup): keep frequently used files on fast media, migrate others to slower (cheaper) media.

Can be done by:

- user — *encouraged* by accounting penalties
- system — migrate files by periodically looking at time of last use
- can provide transparent naming but not performance, e.g. HSM (Windows 2000)

Can integrate multi-level store with ideas from immutable files, e.g. Plan-9:

- file servers with fast disks
- write once optical juke box
- every night, mark all files immutable
- start migration of files which changed the previous day to optical disk
- access to archive explicit
  e.g. /archive/08Jan2003/users/smh/. . .

Case Study 1: FAT16/32

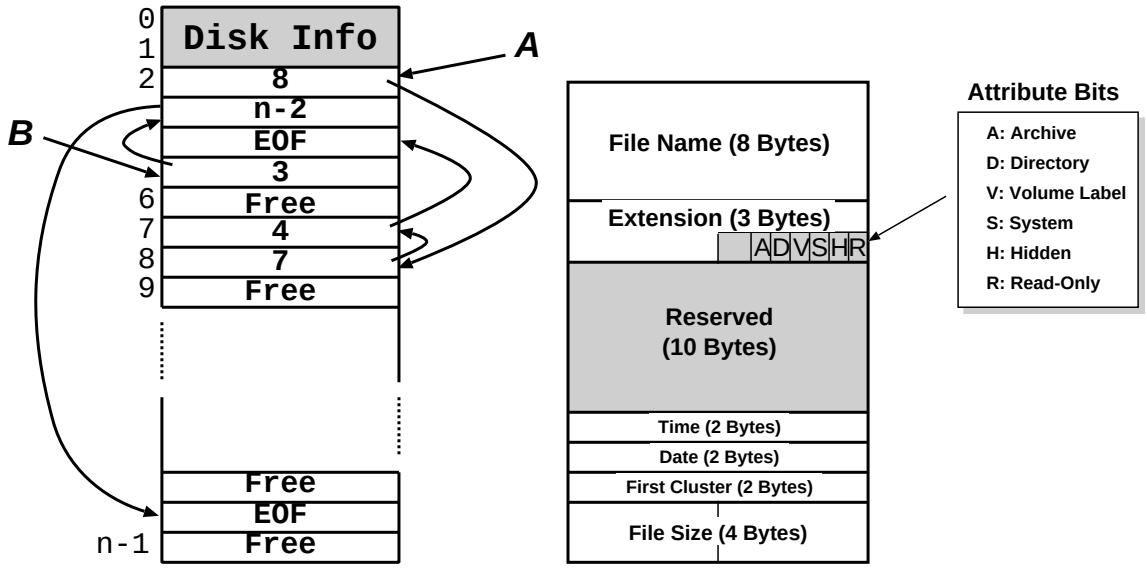

- A file is a linked list of *clusters*: a cluster is a set of 2^n contiguous disk blocks, $n \geq 0$.
- Each entry in the `FAT` contains either:
  - the index of another entry within the `FAT`, or
  - a special value `EOF` meaning "end of file", or
  - a special value `Free` meaning "free".
- Directory entries contain index into the `FAT`
- `FAT16` could only handle partitions up to $(2^{16} \times c)$ bytes $\Rightarrow$ max 2Gb partition with 32K clusters.
- (and big cluster size is *bad*)

Extending FAT16 to FAT32

- Obvious extetension: instead of using 2 bytes per entry, `FAT32` uses 4 bytes per entry

⇒ can support e.g. 8Gb partition with 4K clusters

- Further enhancements with `FAT32` include:
  - can locate the root directory anywhere on the partition (in `FAT16`, the root directory had to immediately follow the `FAT`(s)).
  - can use the backup copy of the `FAT` instead of the default (more fault tolerant)
  - improved support for demand paged executables (consider the 4K default cluster size . . .).

- `VFAT` on top of `FAT32` does long name support: unicode strings of up to 256 characters.
  - want to keep same directory entry structure for compatibility with e.g. DOS

  ⇒ use *multiple* directory entries to contain successive parts of name.
  - abuse `V` attribute to avoid listing these

Case Study 2: BSD FFS

The original Unix file system: simple, elegant, slow.

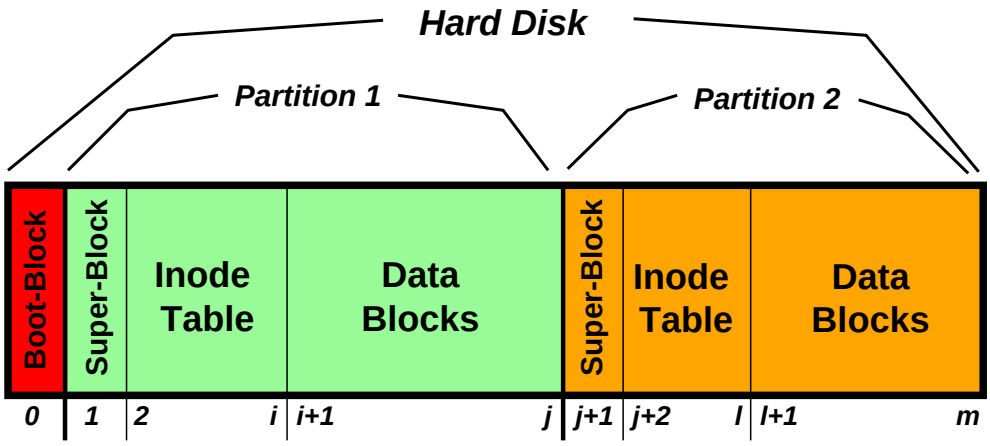

The *fast file-system* (FFS) was develped in the hope of overcoming the following shortcomings:

1. Poor data/metadata layout:
   - widely separating data and metadata $\Rightarrow$ almost guaranteed long seeks
   - head crash near start of partition disastrous.
   - consecutive file blocks not close together.
2. Data blocks too small:
   - 512 byte allocation size good to reduce internal fragementation (median file size $\sim$ 2K)
   - but poor performance for somewhat larger files.

FFS: Improving Performance

The FFS set out to address these issues:

- Block size problem:
  - use larger block size (e.g. 4096 or 8192 bytes)
  - but: last block in a file *may* be split into fragments of e.g. 512 bytes.
- Random allocation problem:
  - ditch free list in favour of bitmap ⇒ since easier to find contiguous free blocks (e.g. `011100000011101`)
  - divide disk into *cylinder groups* containing:
    - a superblock (replica),
    - a set of inodes,
    - a bitmap of free blocks, and
    - usage summary information.
  - (cylinder group $\simeq$ little Unix file system)
- Cylinder groups used to:
  - keep inodes near their data blocks
  - keep inodes of a directory together
  - increase fault tolerance

FFS: Locality and Allocation

- Locality key to achieving high performance
- To achieve locality:
  1. don't let disk fill up ⇒ can find space nearby
  2. spread unrelated things far apart.
- e.g. the BSD allocator tries to keep files in a directory in the same cylinder group, but spread directories out among the various cylinder groups
- similarly allocates runs of blocks within a cylinder group, but switches to a different one after 48K
- So does all this make any difference?
  - yes! about 10x–20x original FS performance
  - get up to 40% of disk bandwidth on large files
  - and *much* beter small file performance.
- Problems?
  - block-based scheme limits throughput ⇒ need decent clustering, or skip-sector allocation
  - crash recovery not particularly fast
  - rather tied to disk geometry. . .

Case Study 3: NTFS

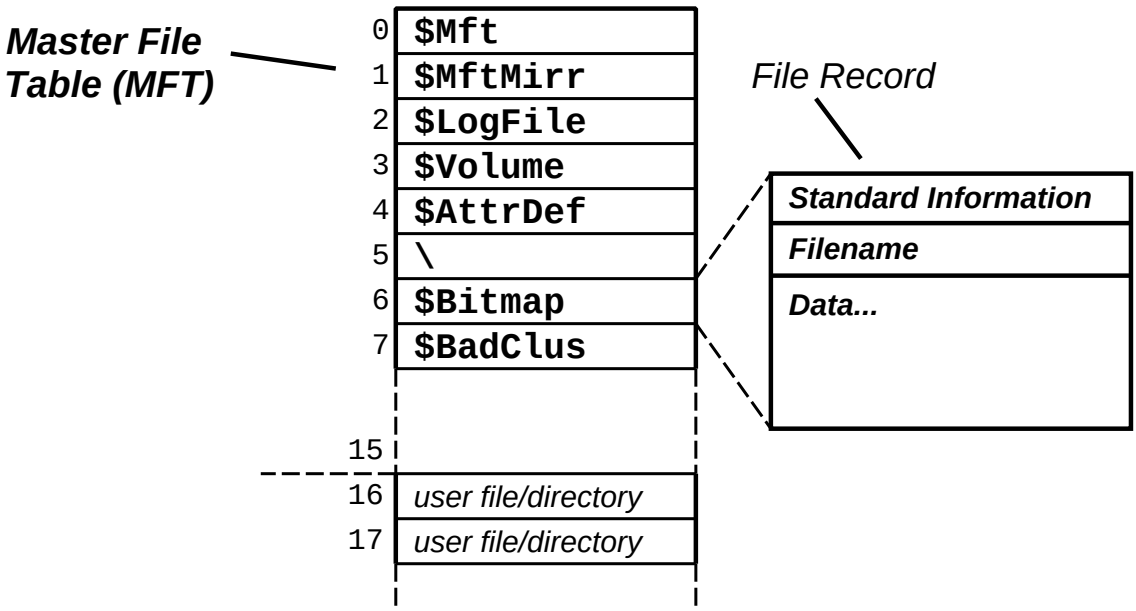

- Fundamental structure of NTFS is a *volume*:
  - based on a logical disk partition
  - may occupy a portion of a disk, and entire disk, or span across several disks.
- An array of file records is stored in a special file called the Master File Table (MFT).
- The MFT is indexed by a *file reference* (a 64-bit unique identifier for a file)
- A file itself is a structured object consisting of set of attribute/value pairs of variable length. . .

NTFS: Recovery

- To aid recovery, all file system data structure updates are performed inside *transactions*:
  - before a data structure is altered, the transaction writes a log record that contains redo and undo information.
  - after the data structure has been changed, a commit record is written to the log to signify that the transaction succeeded.
  - after a crash, the file system can be restored to a consistent state by processing the log records.
- Does not guarantee that all the user file data can be recovered after a crash — just that metadata files will reflect some prior consistent state.
- The log is stored in the third metadata file at the beginning of the volume (`$Logfile`) :
- Logging functionality not part of NTFS itself:
  - NT has a generic *log file service*

  ⇒ could in principle be used by e.g. database
- Overall makes for far quicker recovery after crash

NTFS: Other Features

- Security:
  - each file object has a *security descriptor attribute* stored in its MFT record.
  - this atrribute contains the access token of the owner of the file plus an access control list
- Fault Tolerance:
  - `FtDisk` driver allows multiple partitions be combined into a logical volume (RAID 0, 1, 5)
  - `FtDisk` can also handle *sector sparing* where the underlying SCSI disk supports it
  - NTFS supports software *cluster remapping*.
- Compression:
  - NTFS can divide a file's data into *compression units* (blocks of 16 contiguous clusters)
  - NTFS also has support for *sparse files*
    - clusters with all zeros not allocated or stored
    - instead, gaps are left in the sequences of VCNs kept in the file record
    - when reading a file, gaps cause NTFS to zero-fill that portion of the caller's buffer.

Case Study 4: LFS (Sprite)

LFS is a *log-structured file system* — a radically different file system design:

- Premise 1: CPUs getting faster faster than disks.
- Premise 2: memory cheap ⇒ large disk caches
- Premise 3: large cache ⇒ most disk reads "free".

⇒ performance bottleneck is writing & seeking.

Basic idea: solve write/seek problems by using a *log*:

- log is [logically] an append-only piece of storage comprising a set of *records*.
- all data & meta-data updates written to log.
- periodically flush entire log to disk in a single contiguous transfer:
  - high bandwidth transfer.
  - can make blocks of a file contiguous on disk.
- have two logs ⇒ one in use, one being written.

What are the problems here?

LFS: Implementation Issues

1. How do we find data in the log?
   - can keep basic UNIX structure (directories, inodes, indirect blocks, etc)
   - then just need to find inodes ⇒ use *inode map*
   - find inode maps by looking at a checkpoint
   - checkpoints live in fixed region on disk.
2. What do we do when the disk is full?
   - need asynchronous *scavenger* to run over old logs and free up some space.
   - two basic alternatives:
     1. compact live information to free up space.
     2. thread log through free space.
   - neither great ⇒ use *segmented log*:
     - divide disk into large fixed-size segments.
     - compact within a segment, thread between segments.
     - when writing use only clean segments
     - occasionally clean segments
     - choosing segments to clean is hard. . .

Subject of ongoing debate in the OS community. . .

Protection

Require protection against unauthorised:

- release of information
  - reading or leaking data
  - violating privacy legislation
  - using proprietary software
  - covert channels
- modification of information
  - changing access rights
  - can do sabotage without reading information
- denial of service
  - causing a crash
  - causing high load (e.g. processes or packets)
  - changing access rights

Also wish to protect against the effects of errors:

- isolate for debugging
- isolate for damage control

Protection mechanisms impose controls on access by *subjects* (e.g. users) on *objects* (e.g. files).

Protection and Sharing

If we have a single user machine with no network connection in a locked room then protection is easy.

But we want to:

- share facilities (for economic reasons)
- share and exchange data (application requirement)

Some mechanisms we have already come across:

- user and supervisor levels
  - usually one of each
  - could have several (e.g. MULTICS rings)
- memory management hardware
  - protection keys
  - relocation hardware
  - bounds checking
  - separate address spaces
- files
  - access control list
  - groups etc

Design of Protection System

- Some other protection mechanisms:
  - lock the computer room (prevent people from tampering with the hardware)
  - restrict access to system software
  - de-skill systems operating staff
  - keep designers away from final system!
  - use passwords (in general challenge/response)
  - use encryption
  - legislate
- ref: Saltzer + Schroeder Proc. IEEE Sept 75
  - design should be public
  - default should be no access
  - check for current authority
  - give each process minimum possible authority
  - mechanisms should be simple, uniform and built in to lowest layers
  - should be psychologically acceptable
  - cost of circumvention should be high
  - minimize shared access

Authentication of User to System (1)

Passwords currently widely used:

- want a long sequence of random characters issued by system, but user would write it down
- if allow user selection, they will use dictionary words, car registration, their name, etc.
- best bet probably is to encourage the use of an algorithm to remember password
- other top tips:
  - don't reflect on terminal, or overprint
  - add delay after failed attempt
  - use encryption if line suspect
- what about security of password file?
  - only accessible to login program (CAP, TITAN)
  - hold scrambled, e.g. UNIX
    - only need to write protect file
    - need irreversible function (without password)
    - maybe 'one-way' function
    - however, off line attack possible
      $\Rightarrow$ really should use *shadow passwords*

Authentication of User to System (2)

E.g. passwords in UNIX:

- simple for user to remember

  `arachnid`

- sensible user applies an algorithm

  `!r!chn#d`

- password is DES-encrypted 25 times using a 2-byte per-user 'salt' to produce a 11 byte string
- salt followed by these 11 bytes are then stored

  `IML.DVMcz6Sh2`

Really require unforgeable evidence of identity that system can check:

- enhanced password: challenge-response.
- id card inserted into slot
- fingerprint, voiceprint, face recognition
- smart cards

Authentication of System to User

User wants to avoid:

- talking to wrong computer
- right computer, but not the login program

Partial solution in old days for directly wired terminals:

- make login character same as terminal attention, or
- always do a terminal attention before trying login

But, today micros used as terminals ⇒

- local software may have been changed
- so carry your own copy of the terminal program
- but hardware / firmware in public machine may have been modified

Anyway, still have the problem of comms lines:

- wiretapping is easy
- workstation can often see all packets on network

⇒ must use encryption of some kind, and must trust encryption device (e.g. a smart card)

Mutual suspicion

- We need to encourage lots and lots of suspicion:
  - system of user
  - users of each other
  - user of system
- Called programs should be suspicious of caller (e.g. OS calls always need to check parameters)
- Caller should be suspicious of called program
- e.g. Trojan horse:
  - a 'useful' looking program — a game perhaps
  - when called by user (in many systems) inherits all of the user's privileges
  - it can then copy files, modify files, change password, send mail, etc. . .
  - e.g. Multics editor trojan horse, copied files as well as edited.
- e.g. Virus:
  - often starts off as Trojan horse
  - self-replicating (e.g. ILOVEYOU)

Access matrix

Access matrix is a matrix of subjects against objects.

Subject (or principal) might be:

- users e.g. by uid
- executing process in a protection domain
- sets of users or processes

Objects are things like:

- files
- devices
- domains / processes
- message ports (in microkernels)

Matrix is large and sparse ⇒ don't want to store it all.

Two common representations:

1. by object: store list of subjects and rights with each object ⇒ *access control list*
2. by subject: store list of objects and rights with each subject ⇒ *capabilities*

Access Control Lists

Often used in storage systems:

- system naming scheme provides for ACL to be inserted in naming path, e.g. files
- if ACLs stored on disk, check is made in software
  $\Rightarrow$ must only use on low duty cycle
- for higher duty cycle must cache results of check
- e.g. Multics: open file = memory segment.
  On first reference to segment:
  1. interrupt (segment fault)
  2. check ACL
  3. set up segment descriptor in segment table
- most systems check ACL
  - when file opened for read or write
  - when code file is to be executed
- access control by program, e.g. Unix
  - exam prog, RWX by examiner, X by student
  - data file, A by exam program, RW by examiner
- allows arbitrary policies. . .

Capabilities

Capabilities associated with active subjects, so:

- store in address space of subject
- must make sure subject can't forge capabilities
- easily accessible to hardware
- can be used with high duty cycle
  e.g. as part of addressing hardware
  - Plessey PP250
  - CAP I, II, III
  - IBM system/38
  - Intel iAPX432
- have special machine instructions to modify (restrict) capabilities
- support passing of capabilities on procedure (program) call

Can also use *software* capabilities:

- checked by encryption
- nice for distributed systems

Password Capabilities

- Capabilities nice for distributed systems but:
  - messy for application, and
  - revocation is tricky.
- Could use timeouts (e.g. Amoeba).
- Alternatively: combine passwords and capabilities.
- Store ACL with object, but key it on capability (not implicit concept of "principal" from OS).
- Advantages:
  - revocation possible
  - multiple "roles" available.
- Disadvantages:
  - still messy (use 'implicit' cache?).

Covert channels

Information leakage by side-effects: lots of fun!

At the hardware level:

- wire tapping
- monitor signals in machine
- modification to hardware
- electromagnetic radiation of devices

By software:

- leak a bit stream as:

file exists	page fault	compute a while	1
no file	no page fault	sleep for a while	0

- system may provide statistics
  e.g. TENEX password cracker using system provided count of page faults

In general, guarding against covert channels is prohibitively expensive.

(only usually a consideration for military types)

Summary & Outlook

- An operating system must:
  1. securely multiplex resources.
  2. provide / allow abstractions.
- Major aspect of OS design is choosing trade-offs.
  - e.g. protection vs. performance vs. portability
  - e.g. prettiness vs. power.
- Future systems bring new challenges:
  - scalability (multi-processing/computing)
  - reliability (computing infrastructure)
  - ubiquity (heterogeneity/security)
- Lots of work remains. . .

Exams 2003:

- 2Qs, one each in Papers 3 & 4
- (not mandatory: P3 and P4 both x-of-y)
- Qs generally book-work plus 'decider'

1999: Paper 3 Question 8

FIFO, LRU, and CLOCK are three page replacement algorithms.

a) Briefly describe the operation of each algorithm. **[6 marks]**

b) The CLOCK strategy assumes some hardware support. What could you do to allow the use of CLOCK if this hardware support were not present? **[2 marks]**

c) Assuming good temporal locality of reference, which of the above three algorithms would you choose to use within an operating system? Why would you not use the other schemes? **[2 marks]**

What is a *buffer cache*? Explain why one is used, and how it works. **[6 marks]**

Which buffer cache replacement strategy would you choose to use within an operating system? Justify your answer. **[2 marks]**

Give *two* reasons why the buffering requirements for network data are different from those for file systems. **[2 marks]**

1999: Paper 4 Question 7

The following are three ways which a file system may use to determine which disk blocks make up a given file.

a) chaining in a map
b) tables of pointers
c) extent lists

Briefly describe how each scheme works. [**3 marks each**]

Describe the benefits and drawbacks of using scheme (c). [**6 marks**]

You are part of a team designing a distributed filing system which replicates files for performance and fault-tolerance reasons. It is required that rights to a given file can be revoked within T milliseconds ($T \geq 0$). Describe how you would achieve this, commenting on how the value of T would influence your decision. [**5 marks**]

2000: Paper 3 Question 8

Why are the scheduling algorithms used in general purpose operating systems such as Unix and Windows NT not suitable for real-time systems? **[4 marks]**

Rate monotonic (RM) and earliest deadling first (EDF) are two popular scheduling algorithms for real-time systems. Describe these algorithms, illustrating your answer by showing how each of them would schedule the following task set.

Task	*Requires Exactly*	*Every*
$\mathcal{A}$	2ms	10ms
$\mathcal{B}$	1ms	4ms
$\mathcal{C}$	1ms	5ms

You may assume that context switches are instantaneous.

[8 marks]

Exhibit a task set which is schedulable under EDF but not under RM. You should demonstrate that this is the case, and explain why.

*H*int: consider the relationship between task periods.

[8 marks]

2000: Paper 4 Question 7

Why is it important for an operating system to schedule disk requests? [**4 marks**]

Briefly describe each of the SSTF, SCAN and C-SCAN disk scheduling algorithms. Which problem with SSTF does SCAN seek to overcome? Which problem with SCAN does C-SCAN seek to overcome? [**5 marks**]

Consider a Winchester-style hard disk with 100 cylinders, 4 double-sided platters and 25 sectors per track. The following is the (time-ordered) sequence of requests for disk sectors:

{ 3518, 1846, 8924, 6672, 1590, 4126, 107, 9750, 158, 6621, 446, 11 }.

The disk arm is currently at cylinder 10, moving towards 100. For each of SSTF, SCAN and C-SCAN, give the order in which the above requests would be serviced. [**3 marks**]

Which factors do the above disk arm scheduling algorithms ignore? How could these be taken into account? [**4 marks**]

Discuss ways in which an operating system can construct logical volumes which are (a) more reliable and (b) higher performance than the underlying hardware. [**4 marks**]

2001: Paper 3 Question 7

What are the key issues with scheduling for shared-memory multiprocessors? **[3 marks]**

Processor affinity, *take scheduling* and *gang scheduling* are three techniques used within multiprocessor operating systems.

a) Briefly describe the operation of each. **[6 marks]**

b) Which problem does the processor affinity technique seek to overcome? **[2 marks]**

c) What problem does the processor affinity technique suffer from, and how could this problem in turn be overcome? **[2 marks]**

d) In which circumstances is a gang scheduling approach most appropriate? **[2 marks]**

What additional issues does the virtual memory management system have to address when dealing with shared-memory multiprocessor systems? **[5 marks]**

2001: Paper 4 Question 7

In the context of virtual memory management:

a) What is *demand paging* ? How is it implemented ? **[4 marks]**

b) What is meant by *temporal locality of reference* ? **[2 marks]**

c) How does the assumption of temporal locality of reference influence page replacement decisions? Illustrate your answer by briefly describing an appropriate page replacement algorithm or algorithms. **[3 marks]**

d) What is meant by *spatial locality of reference* ? **[2 marks]**

e) In what ways does the assumption of spatial locality of reference influence the design of the virtual memory system ? **[3 marks]**

A student suggests that the virtual memory system should really deal with "objects" or "procedures" rather than with pages. Make arguments both for and against this suggestion. **[4 and 2 marks respectively]**

.