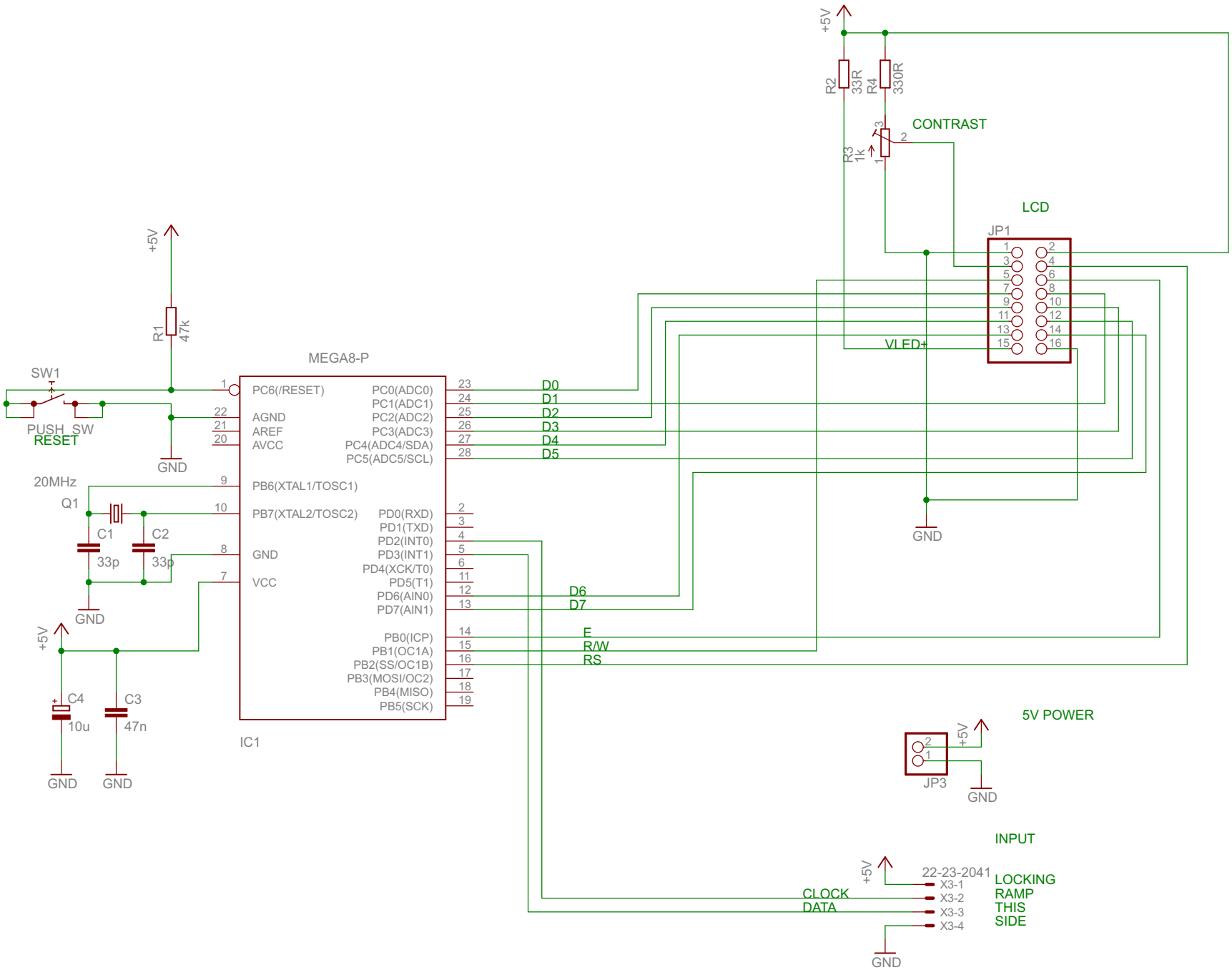

22/09/2009 09:20:53 Z:\projects\atmel_lcd\atmel_lcd.sch (Sheet: 1/1)