Operating Systems

Steven Hand

Easter Term 2001

12 lectures for CST IA

Course Aims

This course aims to:

- provide you with a general understanding of how a computer works,
- explain the structure and functions of an operating system,
- illustrate key operating system aspects by concrete example, and
- prepare you for future courses. . .

At the end of the course you should be able to:

- describe the fetch-execute cycle of a computer
- understand the different types of information which may be stored within a computer memory
- compare and contrast CPU scheduling algorithms
- explain the following: process, address space, file.
- distinguish paged and segmented virtual memory.
- discuss the relative merits of Unix and NT. . .

Course Outline

- Part I: Computer Organisation
  - Computer Foundations
  - Operation of a Simple Computer.
  - Input/Output.
- Part II: Operating System Functions.
  - Introduction to Operating Systems.
  - Processes & Scheduling.
  - Memory Management.
  - I/O & Device Management.
  - Filing Systems.
- Part III: Case Studies.
  - Unix.
  - Windows NT.

Recommended Reading

- Tannenbaum A S
  Structured Computer Organization (3rd Ed)
  Prentice-Hall 1990.
- Patterson D and Hennessy J
  Computer Organization & Design (2rd Ed)
  Morgan Kaufmann 1998.
- Bacon J M
  Concurrent Systems (2nd Ed)
  Addison Wesley 1997
  (especially Part I, and Chapters 23 & 25)
- Silberschatz A, Peterson J and Galvin P
  Operating Systems Concepts (5th Ed.)
  Addison Wesley 1998.
- Leffler S J
  The Design and Implementation of the 4.3BSD
  UNIX Operating System.
  Addison Wesley 1989
- Solomon D
  Inside Windows NT (2nd Ed)
  Microsoft Press 1998.

A Chronology of Early Computing

- (several BC): abacus used for counting
- 1614: logarithms disovered (John Napier)
- 1622: invention of the slide rule (Robert Bissaker)
- 1642: First mechanical digital calculator (Pascal)
- Charles Babbage (U. Cambridge) invents:
  - 1812: "Difference Engine"
  - 1833: "Analytical Engine"
- 1890: First electro-mechanical punched card data-processing machine (Hollerith, later IBM)
- 1905: Vacuum tube/triode invented (De Forest)
- 1935: the relay-based *IBM 601* reaches 1 MPS.
- 1939: *ABC* — first electronic digital computer (Atanasoff & Berry, Iowa State University)
- 1941: *Z3* — first programmable computer (Zuse)
- Jan 1943: the *Harvard Mark I* (Aiken)
- Dec 1943: *Colossus* built at 'Station X', Bletchley Park (Newman & Wynn-Williams, et al).

The Von Neumann Architecture

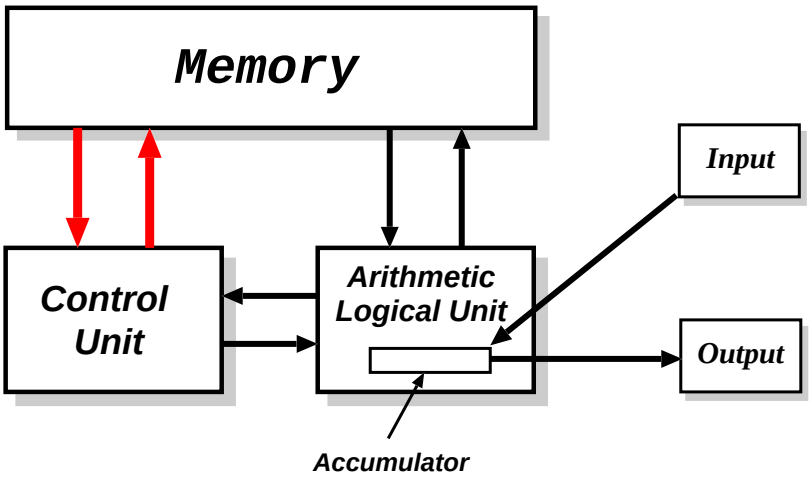

- 1945: *ENIAC* (Eckert & Mauchley, U. Penn):
  - 30 tons, 1000 square feet, 140 kW,
  - 18K vacuum tubes, 20×10-digit accumulators,
  - 100KHz, circa 300 MPS.
  - Used to calculate artillery firing tables.
  - (1946) blinking lights for the media. . .
- But: "programming" is via plugboard ⇒ v. slow.
- 1945: von Neumann drafts "EDVAC" report:
  - design for a stored-program machine
  - Eckert & Mauchley mistakenly unattributed

Further Progress. . .

- 1947: "point contact" transistor invented (Shockley, Bardeen & Brattain, Bell Labs)
- 1949: *EDSAC*, the world's first stored-program computer (Wilkes & Wheeler, U. Cambridge)
  - 3K vacuum tubes, 300 square feet, 12 kW,
  - 500KHz, circa 650 IPS, 225 MPS.
  - 1024 17-bit words of memory in mercury ultrasonic delay lines.
  - 31 word "operating system" (!)
- 1954: *TRADIC*, first electronic computer without vacuum tubes (Bell Labs)
- 1954: first silicon (junction) transistor (TI)
- 1959: first integrated circuit (Kilby & Noyce, TI)
- 1964: IBM System/360, based on ICs.
- 1971: Intel 4004, first micro-processor (Ted Hoff):
  - 2300 transistors, 60 KIPS.
- 1978: Intel 8086/8088 (used in IBM PC).
- $\sim$ 1980: first VLSI chip ($>$ 100,000 transistors)

Today: $\sim$ 40M transistors, $\sim 0.18\mu$, ~ 1.5 GHz.

Languages and Levels

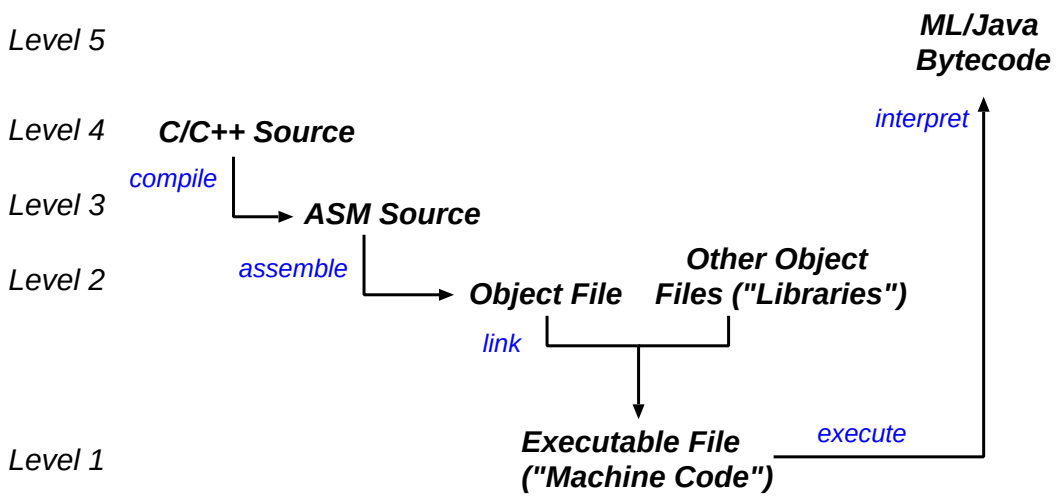

- Modern machines all programmable with a huge variety of different languages.
- e.g. ML, java, C++, C, python, perl, FORTRAN, Pascal, scheme, . . .
- We can describe the operation of a computer at a number of different *levels*; however all of these levels are *functionally equivalent*
  — i.e. can perform the same set of tasks
- Each level relates to the one below via either

  a. translation, or
  b. interpretation.

Layered Virtual Machines

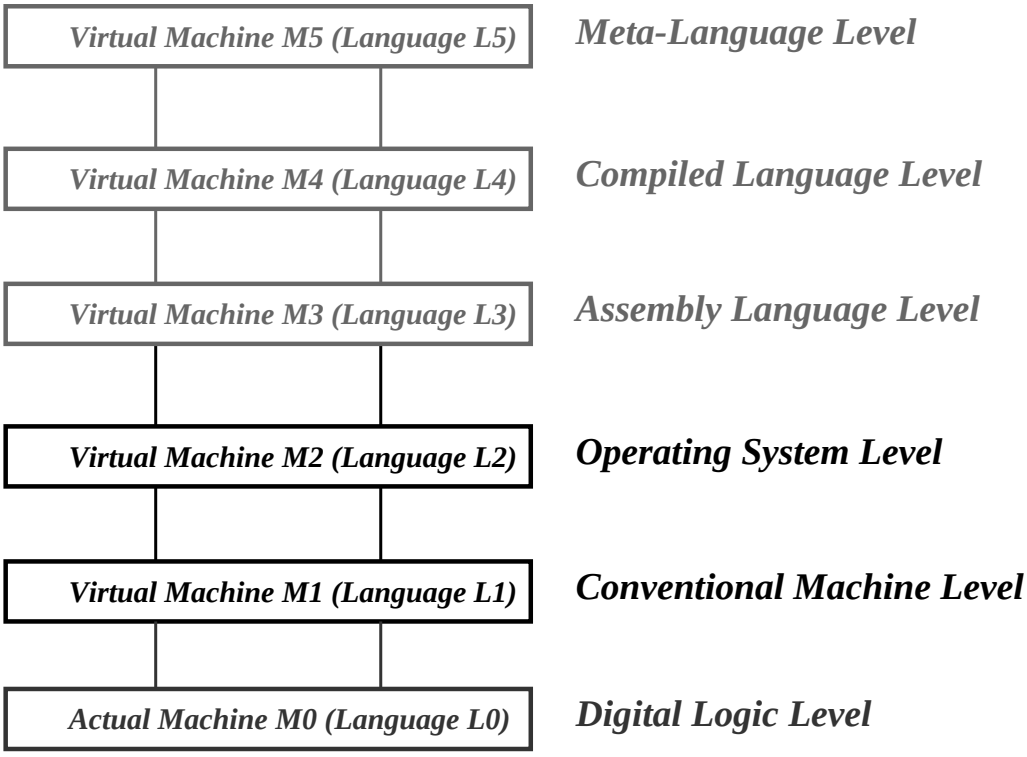

- In one sense, there is a set of different machines M_0, M_1, . . . M_n, each built on top of the other.
- Can consider each machine M_i to understand only machine language L_i.
- Levels 0, -1 pot. done in Dig. Elec., Physics. . .
- This course focuses on levels 1 and 2.
- NB: all levels useful; none "the truth".

A (Simple) Modern Computer

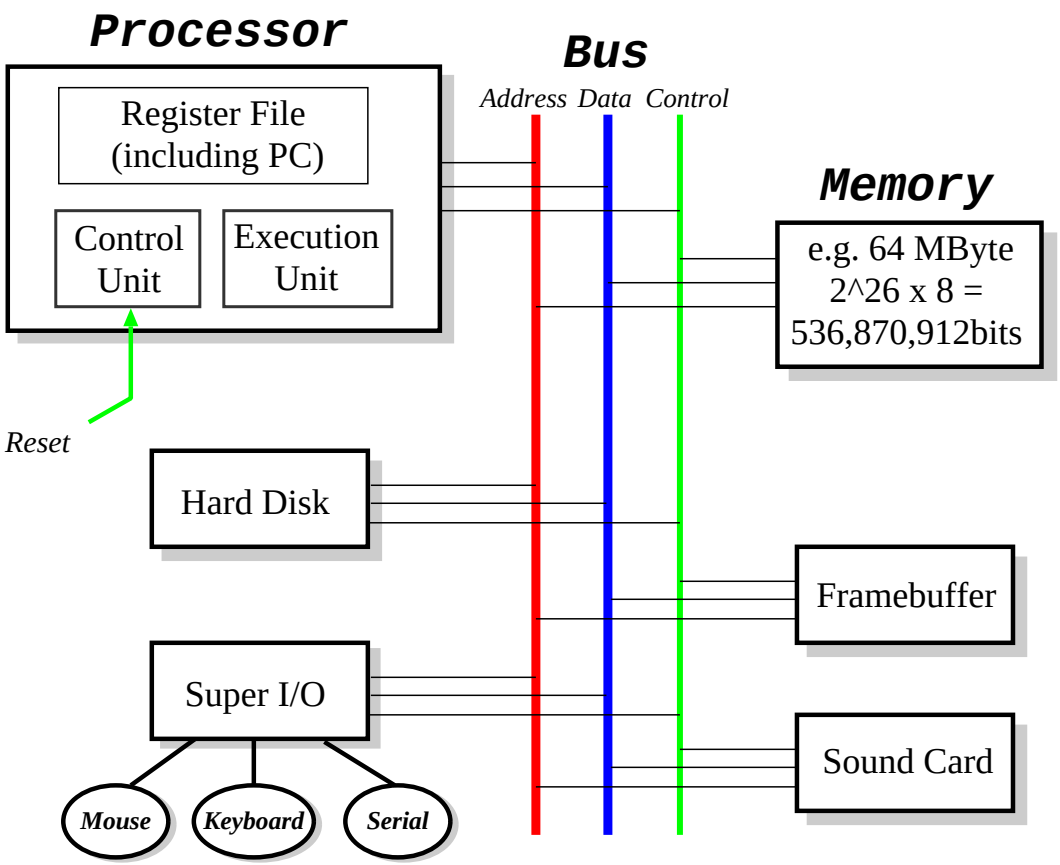

- Processor (CPU): executes programs.
- Memory: stores both programs & data.
- Devices: for input and output.
- Bus: transfers information.

Registers and the Register File

R0	0x5A	R8	0xEA02D1F
R1	0x102034	R9	0x1001D
R2	0x2030ADCB	R10	0xFFFFFFFF
R3	0x0	R11	0x102FC8
R4	0x0	R12	0xFF0000
R5	0x2405	R13	0x37B1CD
R6	0x102038	R14	0x1
R7	0x20	R15	0x20000000

Computers all about operating on information:

- information arrives into memory from input devices
- memory is a essentially large byte array which can hold any information we wish to operate on.
- computer *logically* takes values from memory, performs operations, and then stores result back.
- in practice, CPU operates on *registers*:
  - a register is an extremely fast piece of on-chip memory, usually either 32- or 64-bits in size.
  - modern CPUs have between 8 and 128 registers.
  - data values are *loaded* from memory into registers before being operated upon,
  - and results are *stored* back again.

Memory Hierarchy

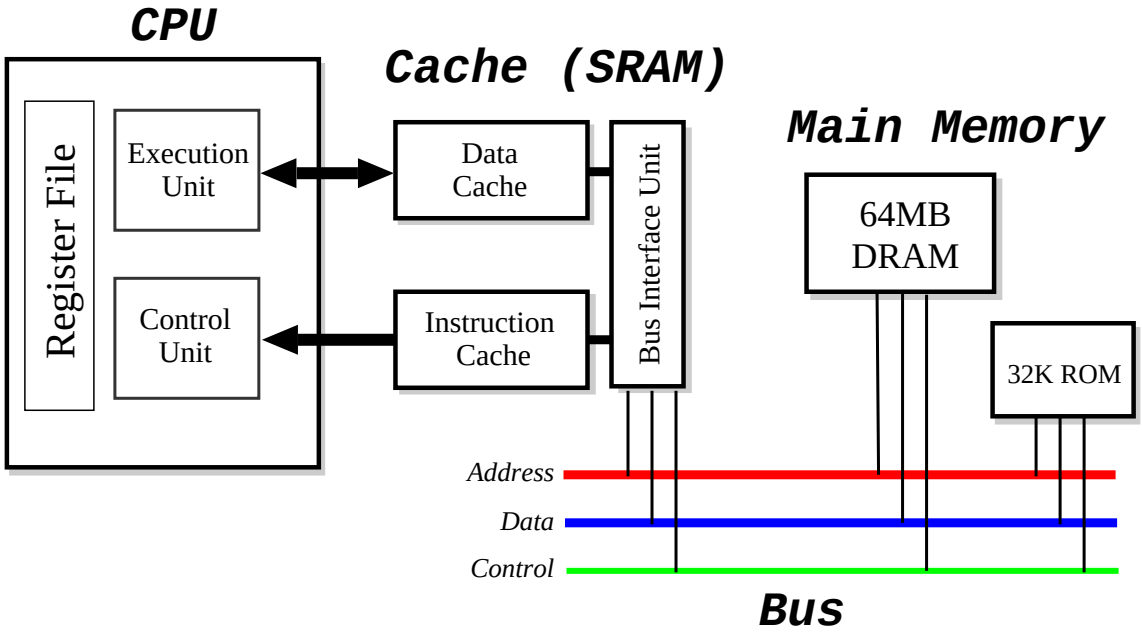

- Use *cache* between main memory and register: try to hide delay in accessing (relatively) slow DRAM.
- Cache made from faster SRAM:
  - more expensive, so much smaller
  - holds copy of subset of main memory.
- Split of instruction and data at cache level $\Rightarrow$ "Harvard" architecture.
- Cache $\leftrightarrow$ CPU interface uses a custom bus.
- Today have ~ 512KB cache, ~ 128MB RAM.

The Fetch-Execute Cycle

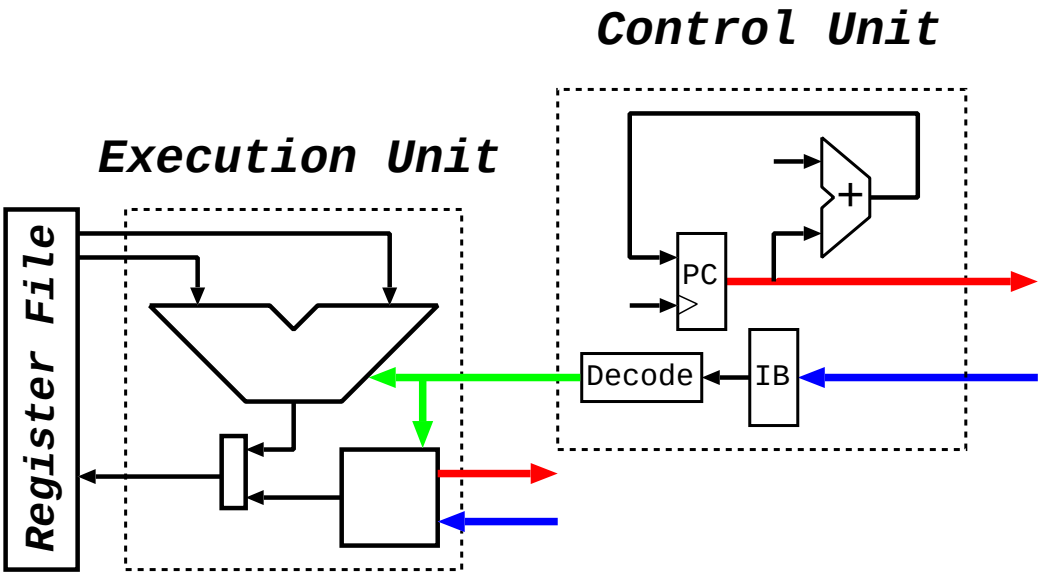

- A special register called *PC* holds a memory address; on reset, initialised to 0.
- Then:
  1. Instruction *fetched* from memory address held in PC into instruction buffer (IB).
  2. Control Unit determines what to do: *decodes* instruction.
  3. Execution Unit *executes* instruction.
  4. PC updated, and back to Step 1.
- Continues pretty much forever. . .

Execution Unit

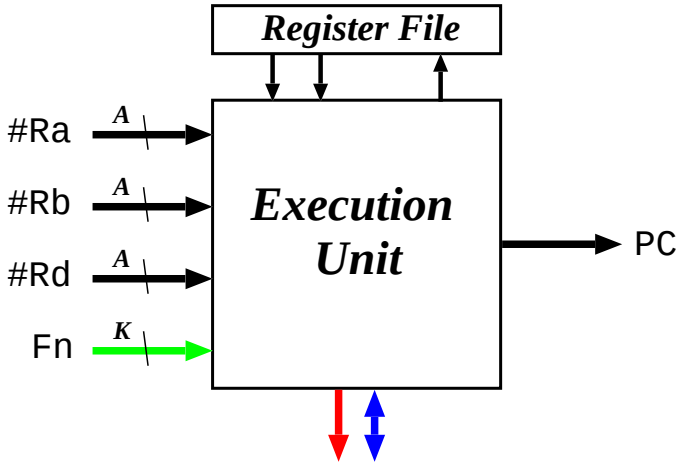

- The "calculator" part of the processor.
- Broken into parts (*functional units*), e.g.
  - Arithmetic Logic Unit (ALU).
  - Shifter/Rotator.
  - Multiplier.
  - Divider.
  - Memory Access Unit (MAU).
  - Branch Unit.
- Choice of functional unit determined by signals from control unit.

Arithmetic Logic Unit

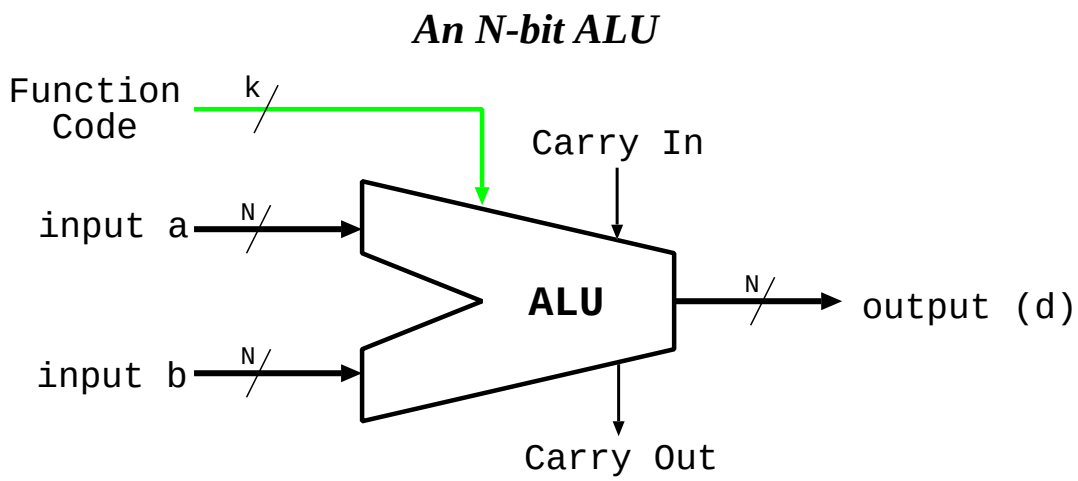

- Part of the execution unit.
- Inputs from register file; output to register file.
- Performs simple two-operand functions:
  - a + b
  - a - b
  - a AND b
  - a OR b
  - etc.
- Typically perform *all* possible functions; use function code to select (mux) output.

Number Representation

0000_2	0_{16}	0110_2	6_{16}	1100_2	C_{16}
0001_2	1_{16}	0111_2	7_{16}	1101_2	D_{16}
0010_2	2_{16}	1000_2	8_{16}	1110_2	E_{16}
0011_2	3_{16}	1001_2	9_{16}	1111_2	F_{16}
0100_2	4_{16}	1010_2	A_{16}	10000_2	10_{16}
0101_2	5_{16}	1011_2	B_{16}	10001_2	11_{16}

- a n-bit register $b_{n-1}b_{n-2}\ldots b_1b_0$ can represent 2^n different values.
- Call b_{n-1} the *most significant bit* (msb), b_0 the *least significant bit* (lsb).
- Unsigned numbers: treat the obvious way, i.e. val $= b_{n-1}2^{n-1} + b_{n-2}2^{n-2} + \cdots + b_1 2^1 + b_0 2^0$, e.g. $1101_2 = 2^3 + 2^2 + 2^0 = 8 + 4 + 1 = 13$.
- Represents values from 0 to $2^n - 1$ inclusive.
- For large numbers, binary is unwieldy: use hexadecimal (base 16).
- To convert, group bits into groups of 4, e.g. $1111101010_2 = 0011|1110|1010_2 = 3EA_{16}$.
- Often use "$0x$" prefix to denote hex, e.g. $0x107$.
- Can use dot to separate large numbers into 16-bit chunks, e.g. $0x3FF.FFFF$.

Number Representation (2)

- What about *signed* numbers? Two main options:
- Sign & magnitude:
  - top (leftmost) bit flags if negative; remaining bits make value.
  - e.g. byte $10011011_2 \rightarrow -0011011_2 = -27$.
  - represents range $-(2^{n-1} - 1)$ to $+(2^{n-1} - 1)$, and the bonus value -0 (!).
- 2's complement:
  - to get $-x$ from x, invert every bit and add 1.
  - e.g. $+27 = 00011011_2 \Rightarrow$ $-27 = (11100100_2 + 1) = 11100101_2$.
  - treat $1000\ldots000_2$ as -2^{n-1}.
  - represents range -2^{n-1} to $+(2^{n-1} - 1)$
- Note:
  - in both cases, top-bit means "negative".
  - both representations depend on n;
- In practice, all modern computers use 2's complement. . .

Unsigned Arithmetic

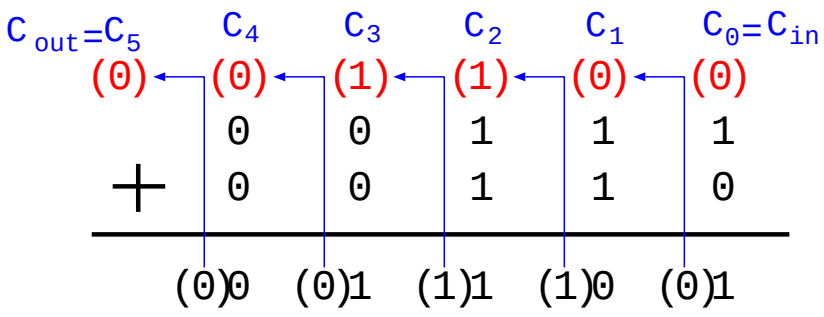

- (we use 5-bit registers for simplicity)
- Unsigned addition: C_n means "carry":

```
   00101     5          11110    30
 + 00111     7        +  00111     7
-------------        --------------
0  01100    12        1  00101     5
-------------        --------------
```

- Unsigned subtraction: $\overline{C_n}$ means "borrow":

```
   11110    30          00111     7
 + 00101   -27        +  10110   -10
-------------        --------------
1  00011     3        0  11101    29
-------------        --------------
```

Signed Arithmetic

- In signed arithmetic, carry no good on its own. Use the *overflow* flag, $V = (C_n \oplus C_{n-1})$.
- Also have *negative* flag, $N = b_{n-1}$ (i.e. the msb).
- Signed addition:

```
   00101     5          01010    10
 + 00111     7        +  00111     7
-------------        --------------
0  01100    12        0  10001   -15
-------------        --------------
   0                     1
```

- Signed subtraction:

```
   01010    10          10110   -10
 + 11001    -7        +  10110   -10
-------------        --------------
1  00011     3        1  01100    12
-------------        --------------
   1                     0
```

- Note that in overflow cases the sign of the result is always wrong (i.e. the N bit is inverted).

Arithmetic & Logical Instructions

- Some common ALU instructions are:

Mnemonic		C/Java Equivalent
`and`	$d \leftarrow a, b$	`d = a & b;`
`xor`	$d \leftarrow a, b$	`d = a ^ b;`
`bis`	$d \leftarrow a, b$	`d = a | b;`
`bic`	$d \leftarrow a, b$	`d = a & (~b);`
`add`	$d \leftarrow a, b$	`d = a + b;`
`sub`	$d \leftarrow a, b$	`d = a - b;`
`rsb`	$d \leftarrow a, b$	`d = b - a;`
`shl`	$d \leftarrow a, b$	`d = a << b;`
`shr`	$d \leftarrow a, b$	`d = a >> b;`

  Both d and a *must* be registers; b can be a register or a (small) constant.

- Typically also have `addc` and `subc`, which handle carry or borrow (for multi-precision arithmetic), e.g.

```
add  d0, a0, b0    // compute "low" part.
addc d1, a1, b1    // compute "high" part.
```

- May also get:
  - Arithmetic shifts: `asr` and `asl`(?)
  - Rotates: `ror` and `rol`.

Conditional Execution

- Seen C, N, V; add Z (zero), logical NOR of all bits in output.
- Can predicate execution based on (some combination) of flags, e.g.

```
sub d, a, b     // compute d = a - b
beq proc1       // if equal, goto proc1
br  proc2       // otherwise goto proc2
```

  Java equivalent approximately:

```
if (a==b) proc1() else proc2();
```

- On most computers, mainly limited to branches.
- On ARM (and IA64), everything conditional, e.g.

```
sub   d, a, b     # compute d = a - b
moveq d, #5       # if equal, d = 5;
movne d, #7       # otherwise d = 7;
```

  Java equiv: `d = (a==b) ? 5 : 7;`

- "Silent" versions useful when don't really want result, e.g. `tst`, `teq`, `cmp`.

Condition Codes

Suffix	Meaning	Flags
`EQ`, `Z`	Equal, zero	Z == 1
`NE`, `NZ`	Not equal, non-zero	Z == 0
`MI`	Negative	N == 1
`PL`	Positive (incl. zero)	N == 0
`CS`, `HS`	Carry, higher or same	C == 1
`CC`, `LO`	No carry, lower	C == 0
`VS`	Overflow	V == 1
`VC`	No overflow	V == 0
`HI`	Higher	C == 1 && Z == 0
`LS`	Lower or same	C == 0 || Z == 1
`GE`	Greater than or equal	N == V
`GT`	Greater than	N == V && Z == 0
`LT`	Less than	N != V
`LE`	Less than or equal	N != V || Z == 1

- `HS`, `LO`, etc. used for unsigned comparisons (recall that $\overline{C}$ means "borrow").
- `GE`, `LT`, etc. used for signed comparisons: check both N and V so always works.

Loads & Stores

- Have variable sized values, e.g. bytes (8-bits), words (16-bits), longwords (32-bits) and quadwords (64-bits).
- Load or store instructions usually have a suffix to determine the size, e.g. '`b`' for byte, '`w`' for word, '`l`' for longword.
- When storing > 1 byte, have two main options: big endian and little endian; e.g. storing longword `0xDEADBEEF` into memory at address `0x4`.

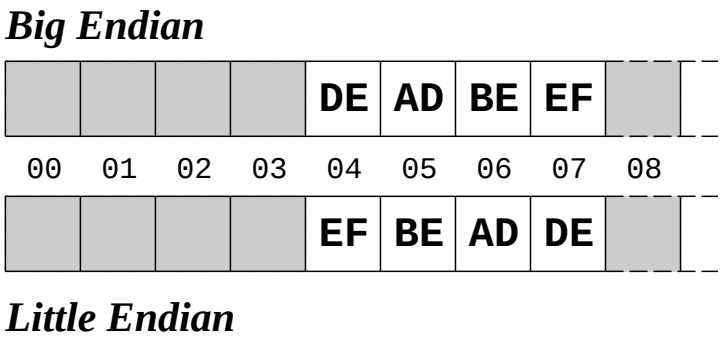

If read back a *byte* from address `0x4`, get `0xDE` if big-endian, or `0xEF` if little-endian.

- Today have x86 & Alpha little endian; Sparc & 68K, big endian; Mips & ARM either.

Addressing Modes

- An *addressing mode* tells the computer where the data for an instruction is to come from.
- Get a wide variety, e.g.

Register:	`add r1, r2, r3`
Immediate:	`add r1, r2, #25`
PC Relative:	`beq 0x20`
Register Indirect:	`ldr r1, [r2]`
" + Displacement:	`str r1, [r2, #8]`
Indexed:	`movl r1, (r2, r3)`
Absolute/Direct:	`movl r1, $0xF1EA0130`
Memory Indirect:	`addl r1, ($0xF1EA0130)`

- Most modern machines are *load/store* ⇒ only support first five:
  - allow at most one memory ref per instruction
  - (there are very good reasons for this)
- Note that CPU generally doesn't care *what* is being held within the memory.
- i.e. up to *programmer* to interpret whether data is an integer, a pixel or a few characters in a novel.

Representing Text

- Two main standards:
  1. ASCII: 7-bit code holding (English) letters, numbers, punctuation and a few other characters.
  2. Unicode: 16-bit code supporting practically all international alphabets and symbols.
- ASCII default on many operating systems, and on the early Internet (e.g. e-mail).
- Unicode becoming more popular (esp UTF-8!).
- In both cases, represent in memory as either *strings* or *arrays*: e.g. "Pub Time!"

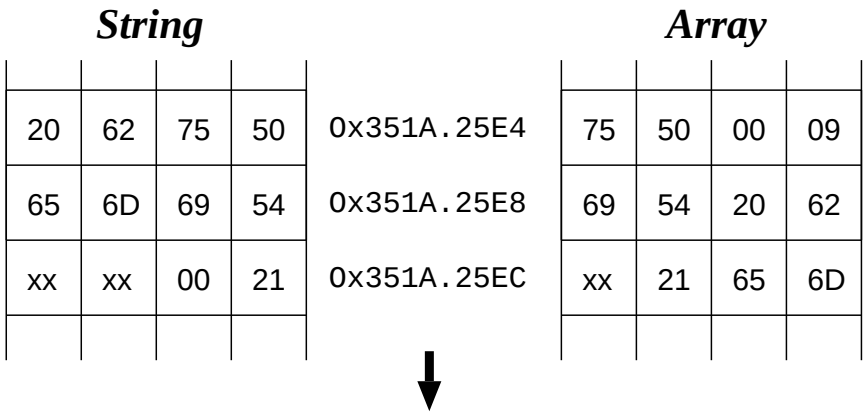

- `0x492077697368206974207761732032a2d28`

Floating Point (1)

- In many cases want to deal with very large or very small numbers.
- Use idea of "scientific notation", e.g. $n = m \times 10^e$
  - m is called the $mantissa$
  - e is called the $exponent$.

  e.g. $C = 3.01 \times 10^8$ m/s.
- For computers, use binary i.e. $n = m \times 2^e$, where m includes a "binary point".
- Both m and e can be positive or negative; typically
  - sign of mantissa given by an additional $sign$ bit.
  - exponent is stored in a $biased$ ($excess$) format.

$\Rightarrow$ use $n = (-1)^s m \times 2^{e-b}$, where $0 \leq m < 2$ and b is the bias.

- e.g. 4-bit mantissa & 3-bit bias-3 exponent allows positive range $[0.001_2 \times 2^{-3}, 1.111_2 \times 2^4]$

$=$ [$(\frac{1}{8})(\frac{1}{8})$, $(\frac{15}{8})16$], or [$\frac{1}{64}$, 30]

Floating Point (2)

- In practice use IEEE floating point with *normalised* mantissa $m = 1.xx\ldots x_2$
  $\Rightarrow$ use $n = (-1)^s((1+m) \times 2^{e-b})$,
- Both single (`float`) and double (`double`) precision:

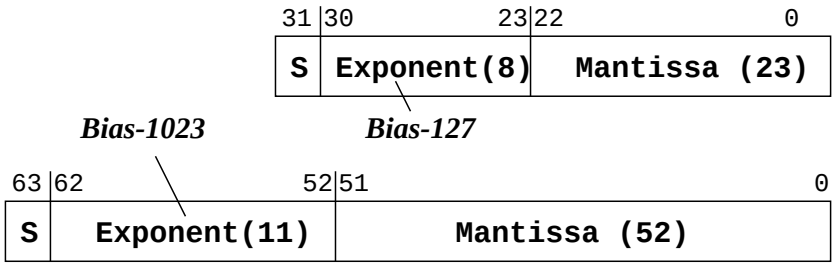

- IEEE fp reserves $e = 0$ and $e =$ max:
  - ± 0 (!): both e and m zero.
  - $\pm\infty$: $e =$ max, m zero.
  - NaNs : $e =$ max, m non-zero.
  - *denorms* : $e = 0$, m non-zero
- Normal positive range $[2^{-126}, \sim 2^{128}]$ for single, or $[2^{-1022}, \sim 2^{1024}]$ for double.
- NB: still only $2^{32}/2^{64}$ values — just spread out.

Data Structures

- Records / structures: each field stored as an offset from a *base address*.
- Variable size structures: explicitly store addresses (*pointers*) inside structure, e.g.

```
datatype rec = node of int * int * rec
             |     leaf of int;

val example = node(4, 5, node(6, 7, leaf(8)));
```

Imagine `example` is stored at address `0x1000`:

Address	Value	Comment
0x0F30	0xFFFF	Constructor tag for a leaf
0x0F34	8	Integer 8
⋮		
0x0F3C	0xFFFE	Constructor tag for a node
0x0F40	6	Integer 6
0x0F44	7	Integer 7
0x0F48	0x0F30	Address of inner node
⋮		
0x1000	0xFFFE	Constructor tag for a node
0x1004	4	Integer 4
0x1008	5	Integer 5
0x100C	0x0F3C	Address of inner node

Instruction Encoding

- An instruction comprises:

  a. an *opcode*: specify what to do.
  b. zero or more *operands*: where to get values

  e.g. `add r1, r2, r3` ≡

1010111	001	010	011

- Old machines (and x86) use *variable length* encoding motivated by low code density.

- Most modern machines use fixed length encoding for simplicity. e.g. ARM ALU operations.

31 28	27 26	25	24 21	20	19 16	15 12	11 0
Cond	**00**	*I*	*Opcode*	*S*	*Ra*	*Rd*	*Operand 2*

`and r13, r13, #31` = `0xe20dd01f` =

1110	00	1	0000	0	1101	1101	000000011111

`bic r3, r3, r2` = `0xe1c33002` =

1110	00	0	1110	0	0011	0011	000000000010

`cmp r1, r2` = `0xe1510002` =

1110	00	0	1010	1	0001	0000	000000000010

Fetch-Execute Cycle Revisited

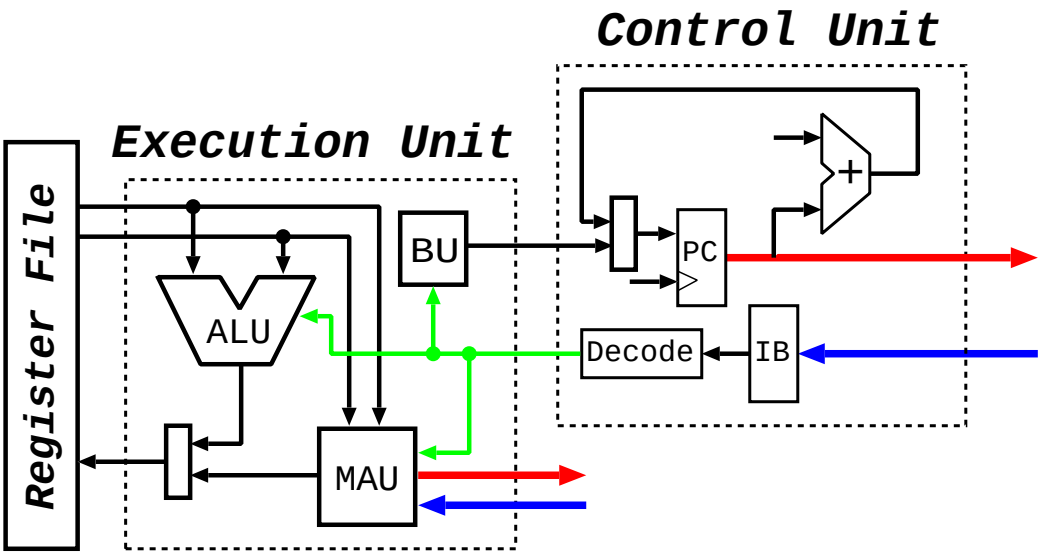

1. CU fetches & decodes instruction and generates (a) control signals and (b) operand information.
2. Inside EU, control signals select functional unit ("instruction class") and operation.
3. If ALU, then read one or two registers, perform operation, and (probably) write back result.
4. If BU, test condition and (maybe) add value to PC.
5. If MAU, generate address ("addressing mode") and use bus to read/write value.
6. Repeat *ad infinitum*.

Input/Output Devices

- Devices connected to processor via a *bus* (e.g. ISA, PCI, AGP).
- Includes a wide range:
  - Mouse,
  - Keyboard,
  - Graphics Card,
  - Sound card,
  - Floppy drive,
  - Hard-Disk,
  - CD-Rom,
  - Network card,
  - Printer,
  - Modem
  - etc.
- Often two or more stages involved (e.g. IDE, SCSI, RS-232, Centronics, etc.)

UARTs

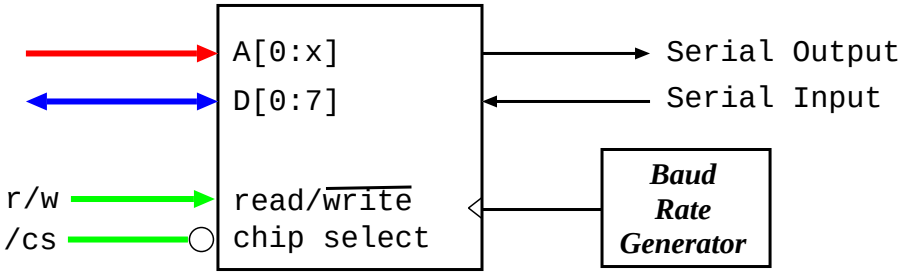

- Universal Asynchronous Receiver/Transmitter:
  - stores 1 or more bytes internally.
  - converts parallel to serial.
  - outputs according to RS-232.
- Various baud rates (e.g. 1,200 – 115,200)
- Slow and simple. . . and very useful.
- Make up "serial ports" on PC.
- Max throughput $\sim$ 14.4KBytes; variants up to 56K (for modems).

Hard Disks

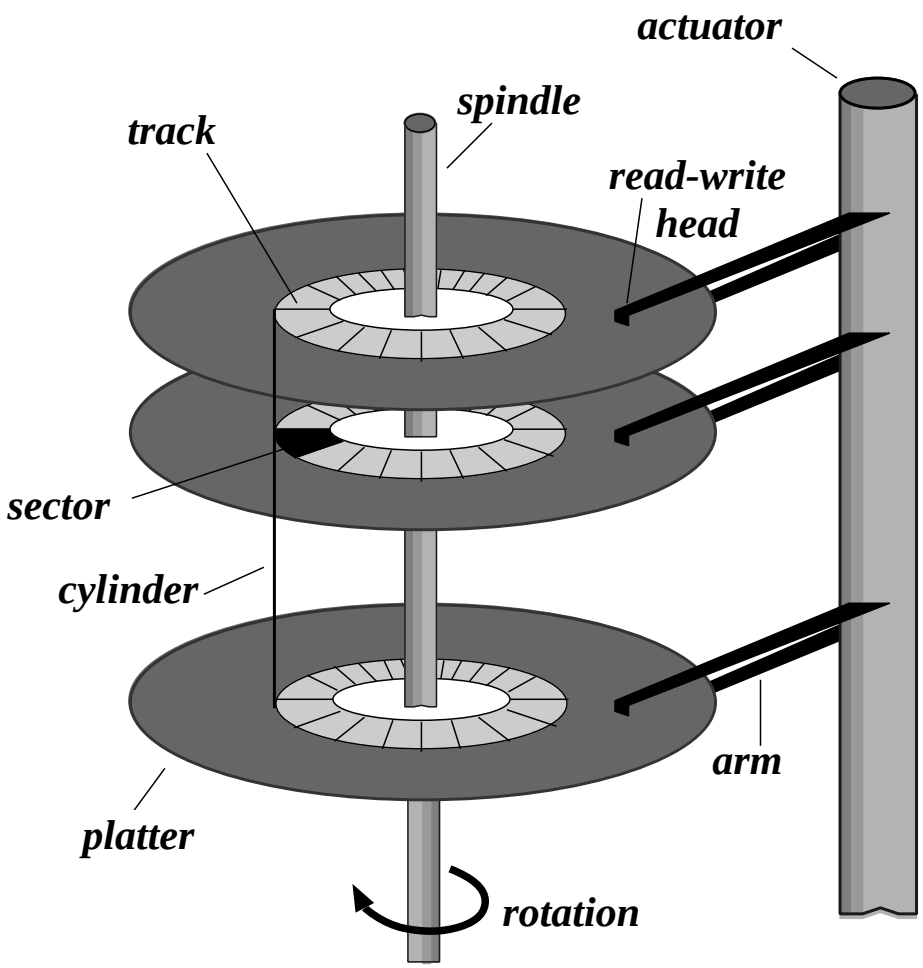

- Whirling bits of (magnetized) metal. . .
- Rotate 3,600 – 7,200 times a minute.
- Capacity $\sim$ 40 GBytes ($\approx 40 \times 2^{30} bytes$).

Graphics Cards

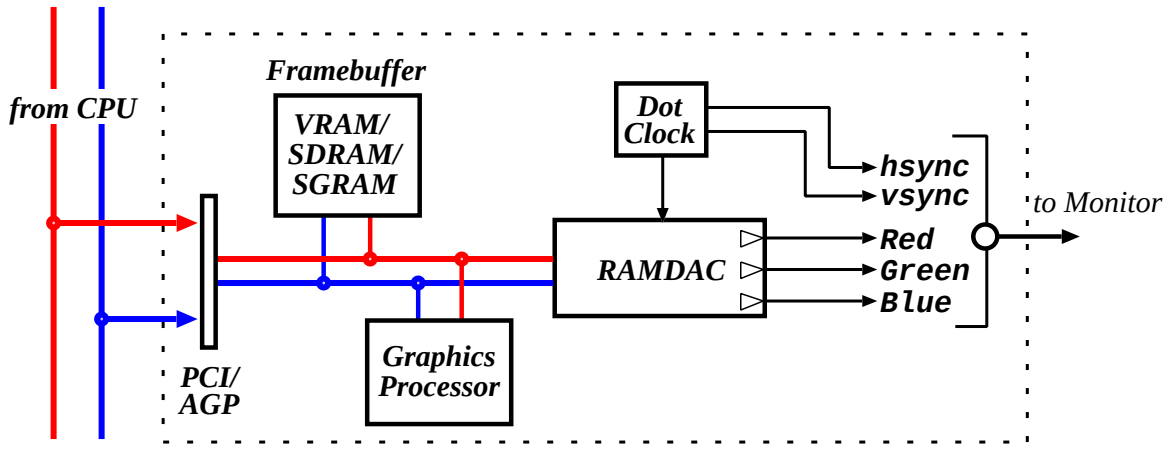

- Essentially some RAM (framebuffer) and some digital-to-analogue circuitry (RAMDAC).
- RAM holds array of *pixels*: picture elements.
- Resolutions e.g. 640x480, 800x600, 1024x768, 1280x1024, 1600x1200.
- Depths: 8-bit (LUT), 16-bit (RGB=555, 24-bit (RGB=888), 32-bit (RGBA=888).
- Memory requirement $= x \times y \times$ depth, e.g. 1024x768 @ 16bpp needs 1536KB.

$\Rightarrow$ full-screen 50Hz video requires 7.5MBytes/s (or 60Mbits/s).

Buses

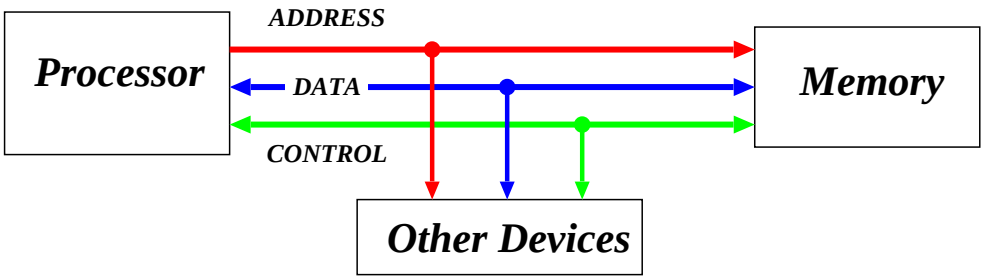

- Bus = collection of *shared* communication wires:
  - ✔ low cost.
  - ✔ versatile / extensible.
  - ✘ potential bottle-neck.
- Typically comprises address lines, data lines and control lines (+ power/ground).
- Operates in a *master-slave* manner, e.g.
  1. master decides to e.g. read some data.
  2. master puts addr onto bus and asserts 'read'
  3. slave reads addr from bus and retrieves data.
  4. slave puts data onto bus.
  5. master reads data from bus.

Bus Hierarchy

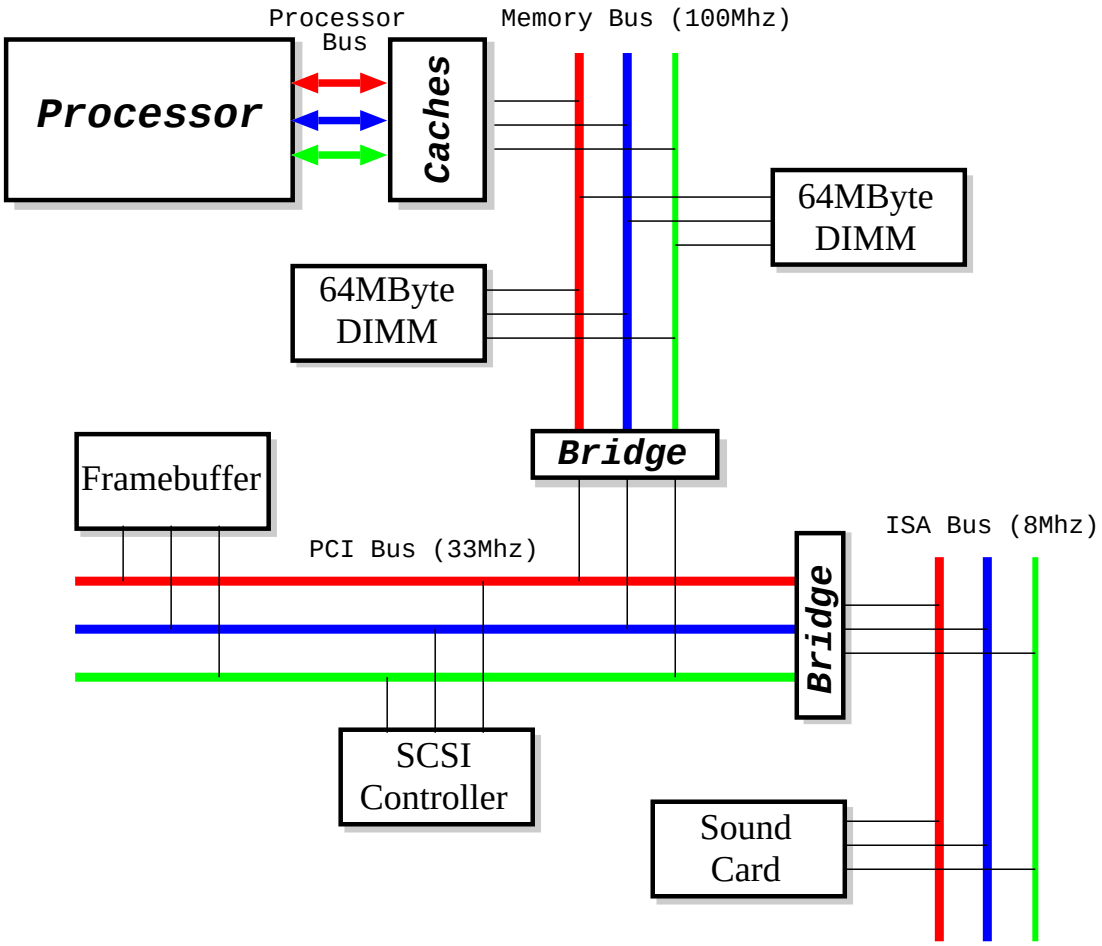

- In practice, have lots of different buses with different characteristics e.g. data width, max #devices, max length.
- Most buses are *synchronous* (share clock signal).

Interrupts

- Bus reads and writes are *transaction* based: CPU requests something and waits until it happens.
- But e.g. reading a block of data from a hard-disk takes $\sim 2ms$, which is $\sim 1,000,000$ clock cycles!
- *Interrupts* provide a way to decouple CPU requests from device responses.
  1. CPU uses bus to make a request (e.g. *writes* some special values to a device).
  2. Device goes off to get info.
  3. Meanwhile CPU continues doing other stuff.
  4. When device finally has information, raises an *interrupt*.
  5. CPU uses bus to read info from device.
- When interrupt occurs, CPU *vectors* to handler, then *resumes* using special instruction, e.g.

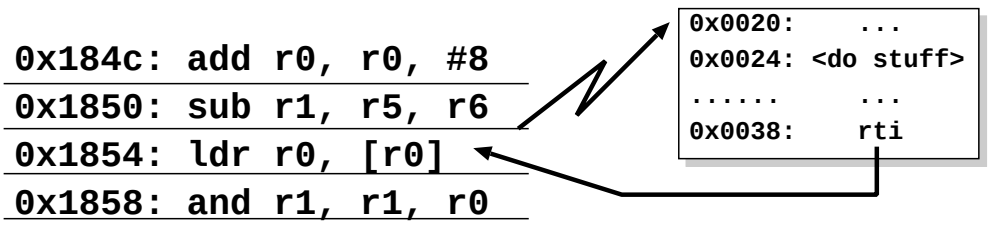

Interrupts (2)

- Interrupt lines ($\sim 4 - 8$) are part of the bus.
- Often only 1 or 2 pins on chip $\Rightarrow$ need to encode.
- e.g. ISA & x86:

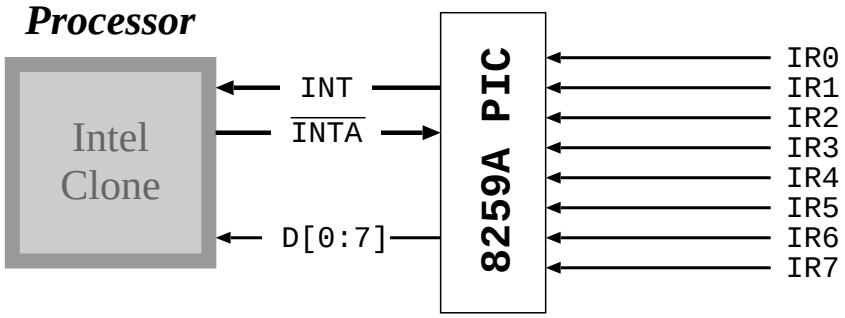

1. Device asserts `IRx`.
2. PIC asserts `INT`.
3. When CPU can interrupt, strobes `INTA`.
4. PIC sends interrupt number on `D[0:7]`.
5. CPU uses number to index into a table in memory which holds the addresses of handlers for each interrupt.
6. CPU saves registers and jumps to handler.

Direct Memory Access (DMA)

- Interrupts good, but even better is a device which can read and write processor memory *directly*.
- A generic DMA "command" might include
  - source address
  - source increment / decrement / do nothing
  - sink address
  - sink increment / decrement / do nothing
  - transfer size
- Get one interrupt at end of data transfer
- DMA channels may be provided by devices themselves:
  - e.g. a disk controller
  - pass disk address, memory address and size
  - give instruction to read or write
- Also get "stand-alone" programmable DMA controllers.

Summary

- Computers made up of four main parts:
  1. Processor (including register file, control unit and execution unit),
  2. Memory (caches, RAM, ROM),
  3. Devices (disks, graphics cards, etc.), and
  4. Buses (interrupts, DMA).
- Information represented in all sorts of formats:
  - signed & unsigned integers,
  - strings,
  - floating point,
  - data structures,
  - instructions.
- Can (hopefully) understand all of these at some level, but gets pretty complex.

$\Rightarrow$ to be able to actually *use* a computer, need an operating system.

Static RAM (SRAM)

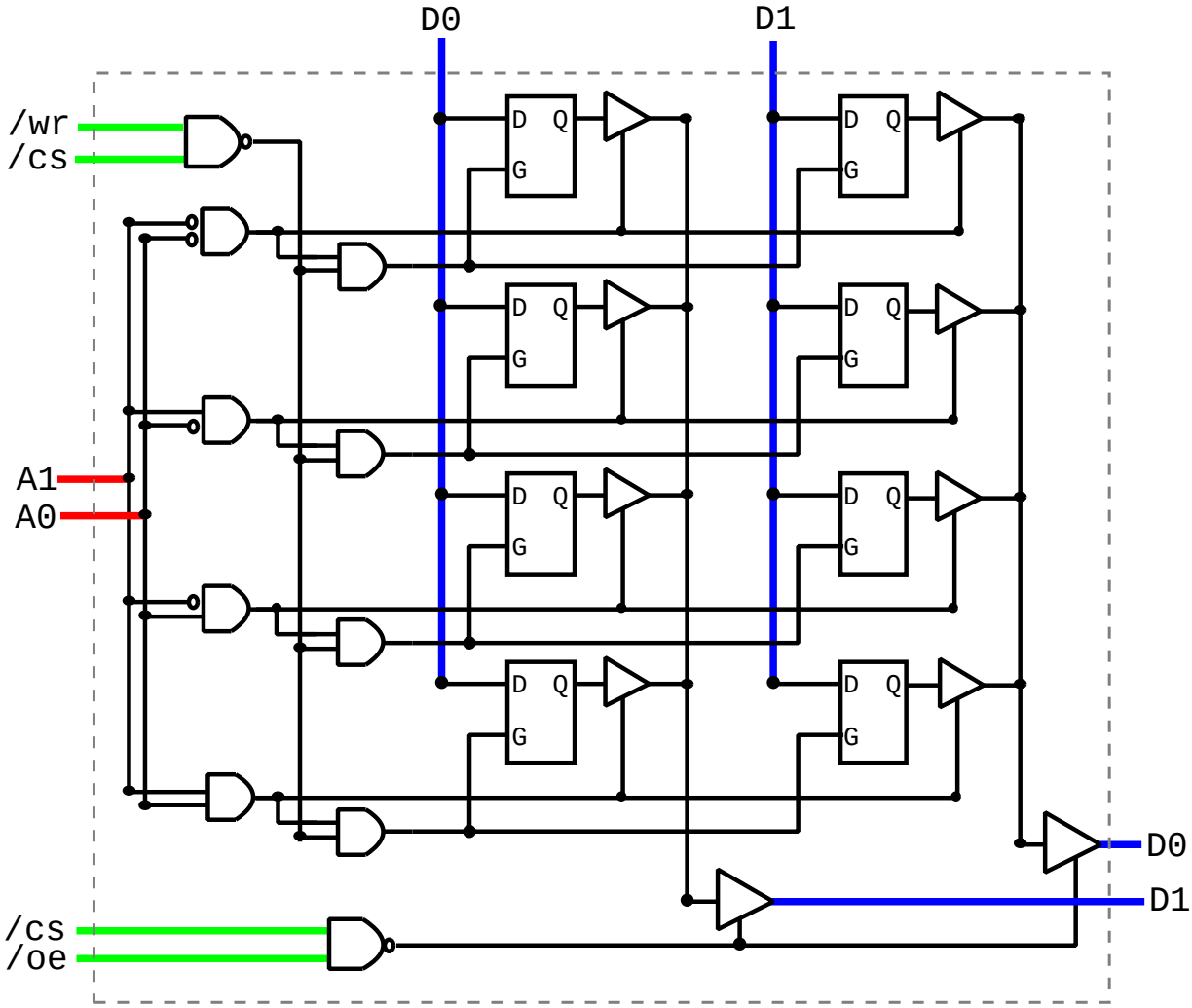

- Relatively fast (currently $5 - 20ns$).
- Logically an array of (transparent) D-latches
- In reality, only cost ~ 6 transistors per bit.

SRAM Reality

SRAM Cell (4T+2R)

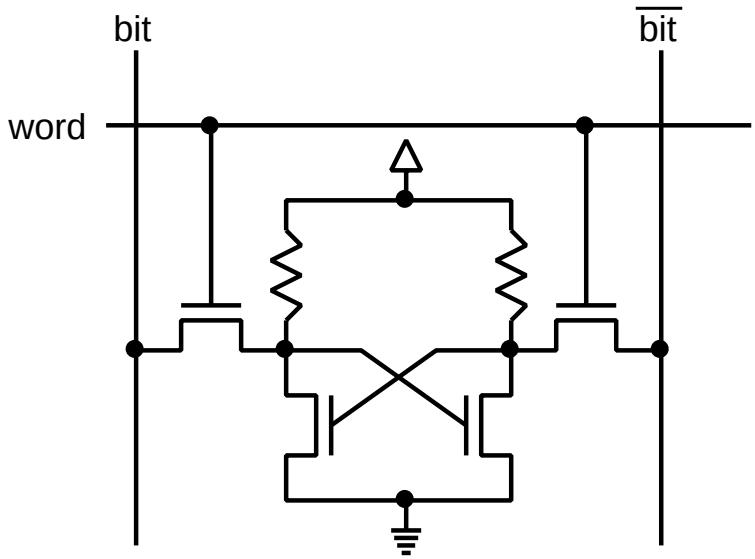

- State held in cross-coupled inverters.
- More common is $6T$ cell; use depletion mode transistors as load resistors.
- To read:
  - precharge `bit` and $\overline{\texttt{bit}}$,
  - strobe `word`,
  - detect difference (sense amp).
- To write:
  - precharge either `bit` (for "1") or $\overline{\texttt{bit}}$ (for "0"),
  - strobe `word`.

Dynamic RAM (DRAM)

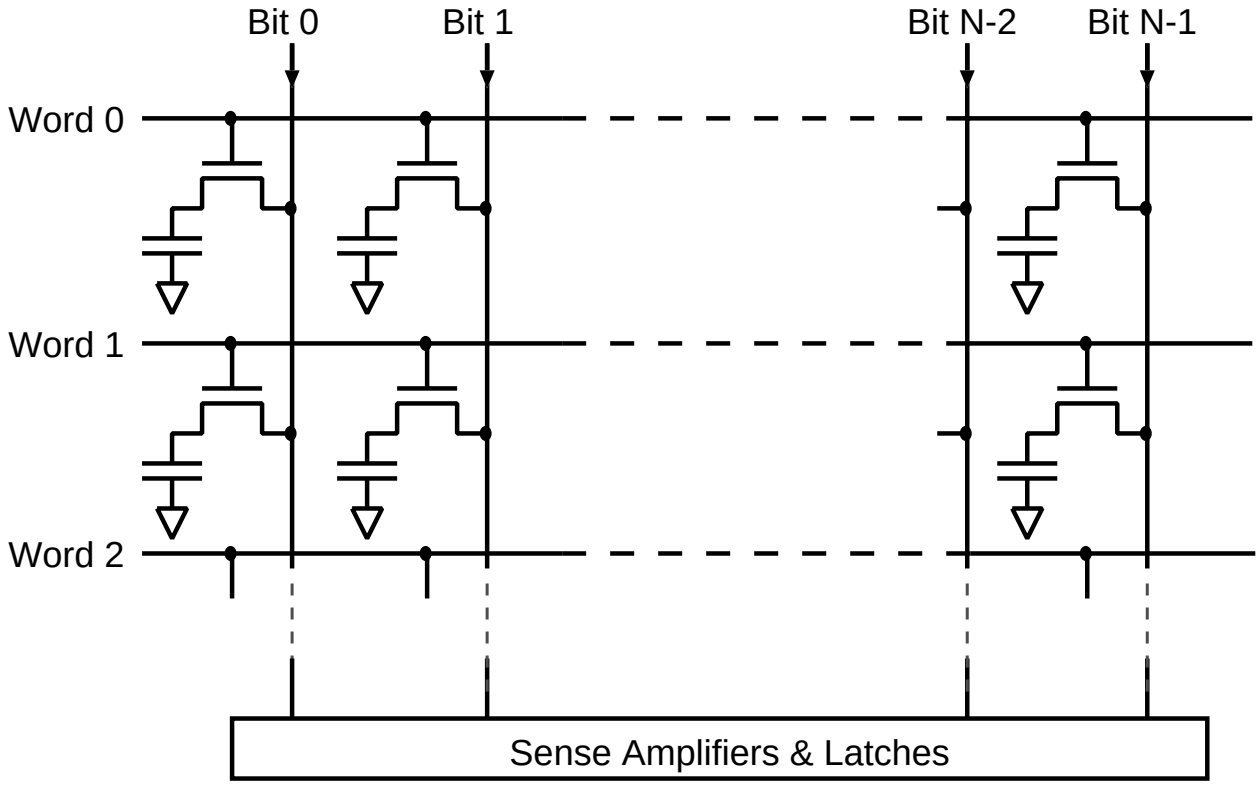

- Use a single transistor to store a bit.
- Write: put value on bit lines, strobe word line.
- Read: pre-charge, strobe word line, amplify, latch.
- "Dynamic": refresh periodically to restore charge.
- Slower than SRAM: typically $50ns - 100ns$.

DRAM Decoding

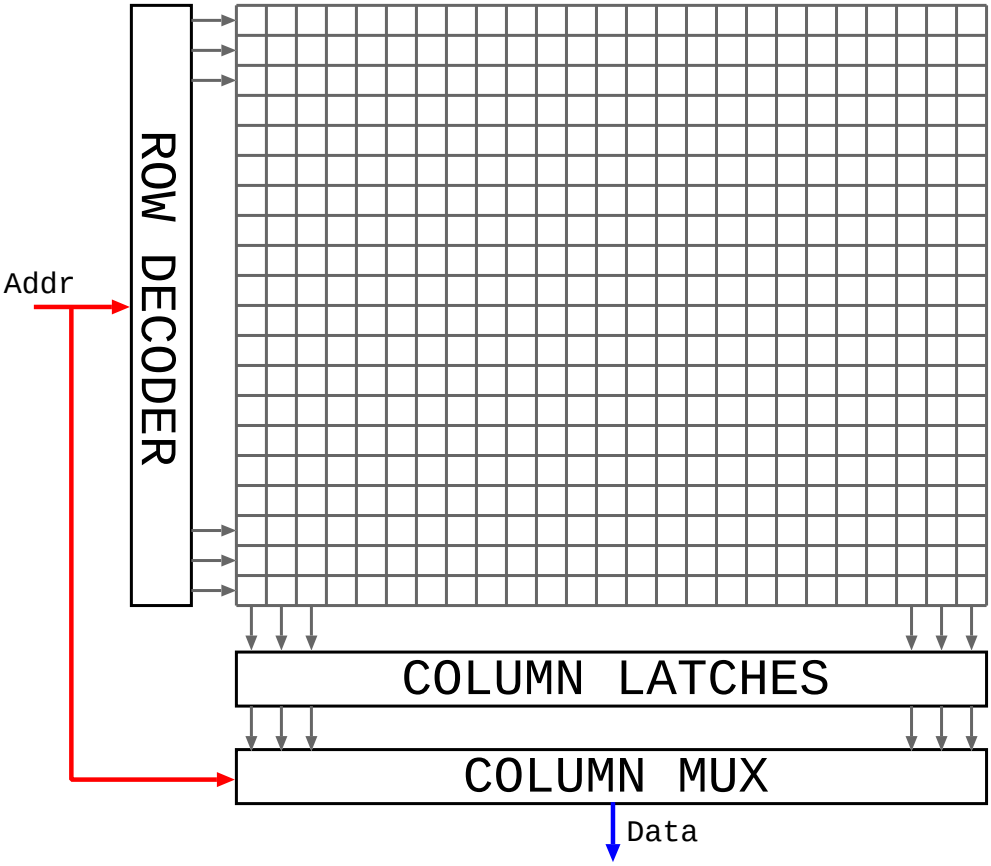

- Two stage: row, then column.
- Usually share address pins: RAS & CAS select decoder or mux.
- FPM, EDO, SDRAM faster for same row reads.

A 1-bit ALU Implementation

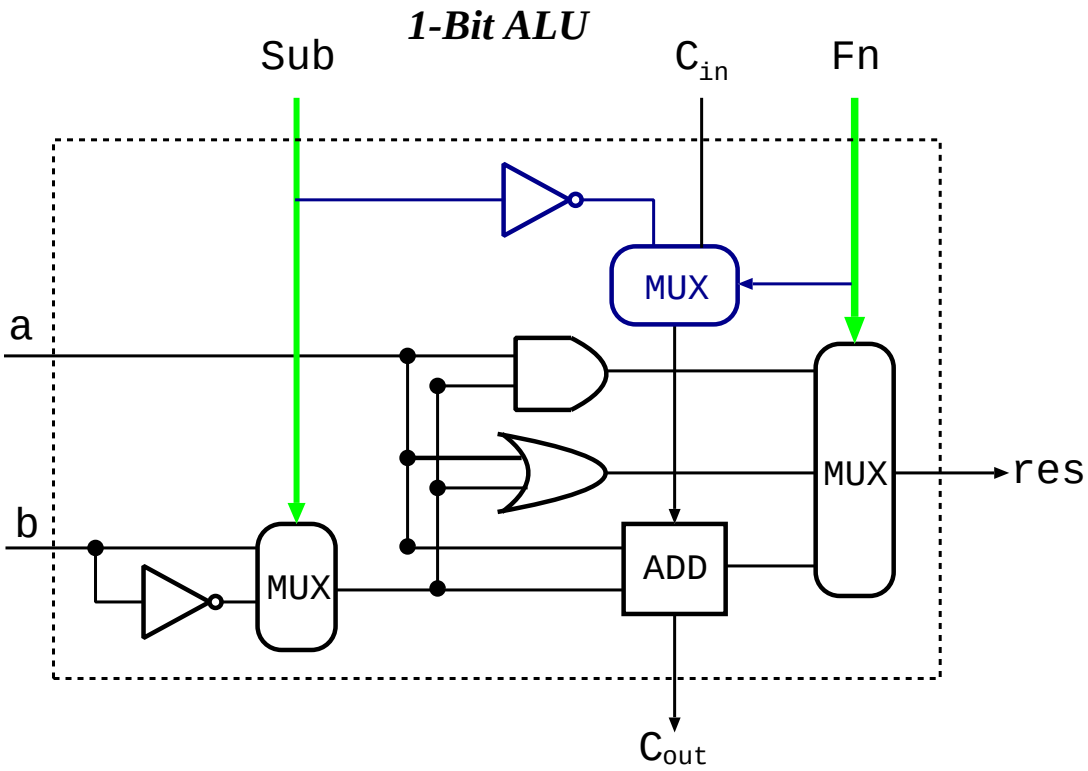

- Eight possible functions (4 types):
  1. a AND b, a AND $\overline{b}$.
  2. a OR b, a OR $\overline{b}$.
  3. $a + b$, $a + b$ with carry.
  4. $a - b$, $a - b$ with borrow.
- To make n-bit ALU bit, connect together (use carry-lookahead on adders).

Accessing Memory

- To load/store values need the *address* in memory.
- Most modern machines are *byte addressed*: consider memory a big array of 2^A bytes, where A is the number of address lines in the bus.
- Lots of things considered "memory" via address decoder, e.g.

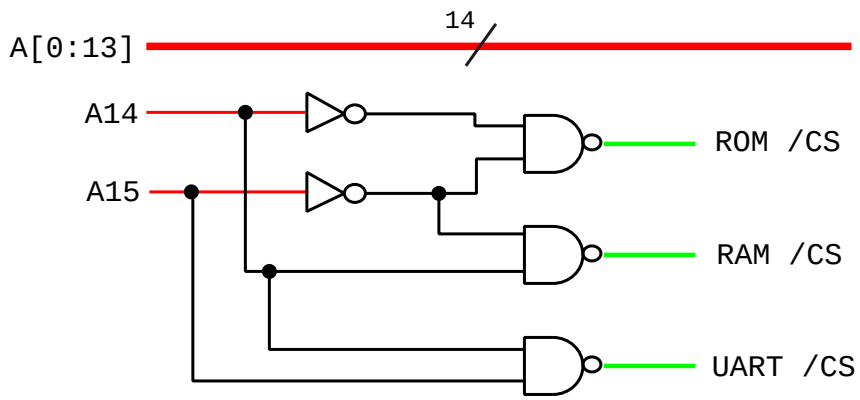

- Typically each device decodes only a subset of low address lines, e.g.

Device	Size	Data	Decodes
ROM	1024 bytes	32-bit	`A[2:9]`
RAM	16384 bytes	32-bit	`A[2:13]`
UART	256 bytes	8-bit	`A[0:7]`

Synchronous Buses

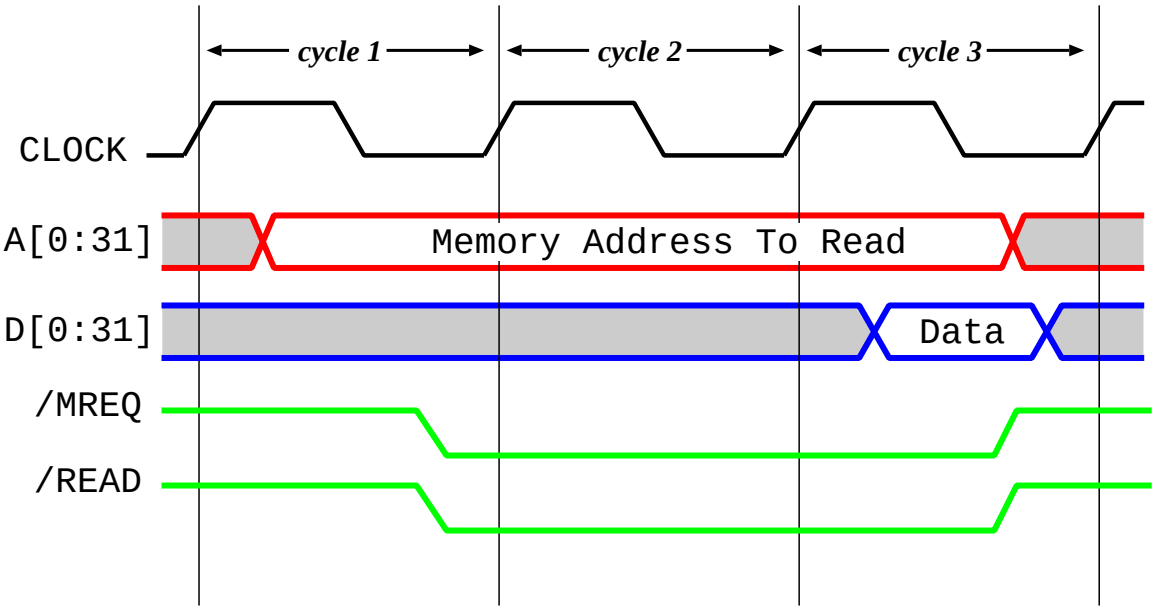

- Figure shows a read transaction which requires three bus cycles.
  1. CPU puts address onto address lines and, after settle, asserts control lines.
  2. Memory fetches data from address.
  3. Memory puts data on data lines, CPU latches value and then deasserts control lines.
- If device not fast enough, can insert *wait states*.
- Faster clock/longer bus can give *bus skew*.

Asynchronous Buses

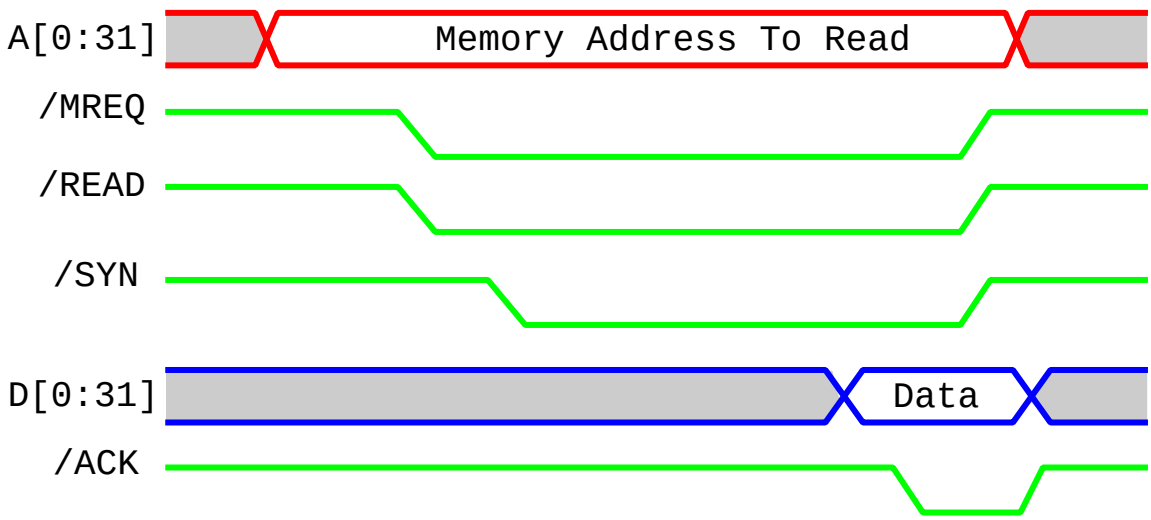

- Asynchronous buses have no shared clock; instead work by *handshaking*, e.g.
  - CPU puts address onto address lines and, after settle, asserts control lines.
  - next, CPU asserts `/SYN` to say everything ready.
  - as soon as memory notices `/SYN`, it fetches data from address and puts it onto bus.
  - memory then asserts `/ACK` to say data is ready.
  - CPU latches data, then deasserts `/SYN`.
  - finally, Memory deasserts `/ACK`.
- More handshaking if mux address & data. . .

What is an Operating System?

- A program which controls the execution of all other programs (applications).
- Acts as an intermediary between the user(s) and the computer.
- Objectives:
  - convenience,
  - efficiency,
  - extensibility.
- Similar to a government. . .

An Abstract View

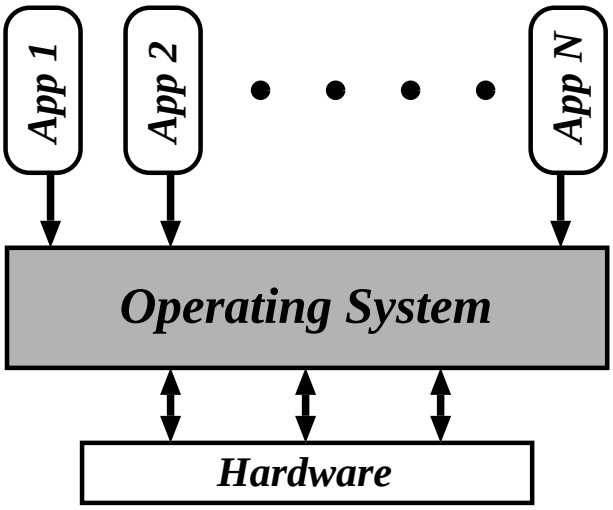

- The Operating System (OS):
  - controls all execution.
  - multiplexes resources between applications.
  - abstracts away from complexity.
- Typically also have some *libraries* and some *tools* provided with OS.
- Are these part of the OS? Is IE4 a tool?
  - no-one can agree. . .
- For us, the OS $\approx$ the *kernel*.

In The Beginning. . .

- 1949: First stored-program machine (EDSAC)
- to $\sim$ 1955: "Open Shop".
  - large machines with vacuum tubes.
  - I/O by paper tape / punch cards.
  - user = programmer = operator.
- To reduce cost, hire an *operator*:
  - programmers write programs and submit tape/cards to operator.
  - operator feeds cards, collects output from printer.
- Management like it.
- Programmers hate it.
- Operators hate it.

$\Rightarrow$ need something better.

Batch Systems

- Introduction of tape drives allow *batching* of jobs:
  - programmers put jobs on cards as before.
  - all cards read onto a tape.
  - operator carries input tape to computer.
  - results written to output tape.
  - output tape taken to printer.
- Computer now has a *resident monitor*:
  - initially control is in monitor.
  - monitor reads job and transfer control.
  - at end of job, control transfers back to monitor.
- Even better: *spooling systems*.
  - use interrupt driven I/O.
  - use magnetic disk to cache input tape.
  - fire operator.
- Monitor now *schedules* jobs. . .

Multi-Programming

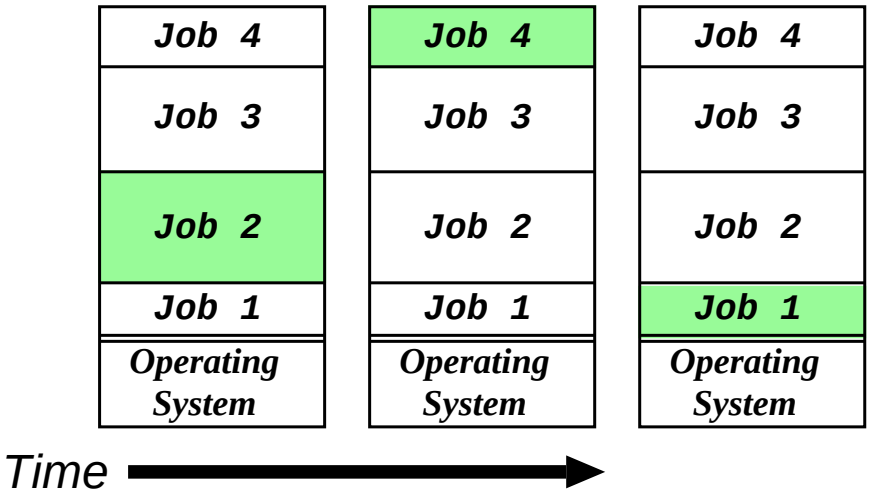

- Use memory to cache jobs from disk ⇒ more than one job active simultaneously.
- Two stage scheduling:
  1. select jobs to load: *job scheduling*.
  2. select resident job to run: *CPU scheduling*.
- Users want more interaction ⇒ *time-sharing*:
- e.g. CTSS, TSO, Unix, VMS, Windows NT. . .

Today and Tomorrow

- Single user systems: cheap and cheerful.
  - personal computers.
  - no other users ⇒ ignore protection.
  - e.g. DOS, Windows, Win 95/98, . . .
- RT Systems: power is nothing without control.
  - hard-real time: nuclear reactor safety monitor.
  - soft-real time: mp3 player.
- Parallel Processing: the need for speed.
  - SMP: 2–8 processors in a box.
  - MIMD: super-computing.
- Distributed computing: global processing?
  - Java: the network is the computer.
  - Clustering: the network is the bus.
  - CORBA: the computer is the network.
  - .NET: the network is an enabling framework. . .

Monolithic Operating Systems

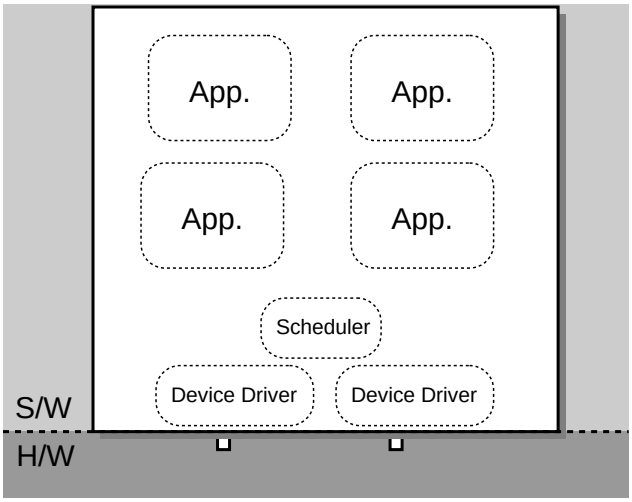

- Oldest kind of OS structure ("modern" examples are DOS, original MacOS)
- Problem: applications can e.g.
  - trash OS software.
  - trash another application.
  - hoard CPU time.
  - abuse I/O devices.
  - etc. . .
- No good for fault containment (or multi-user).
- Need a better solution. . .

Dual-Mode Operation

- Want to stop buggy (or malicious) program from doing bad things.

$\Rightarrow$ provide *hardware* support to differentiate between (at least) two modes of operation.

1. *User Mode* : when executing on behalf of a user (i.e. application programs).
2. *Kernel Mode* : when executing on behalf of the operating system.

- Hardware contains a mode-bit, e.g. 0 means kernel, 1 means user.

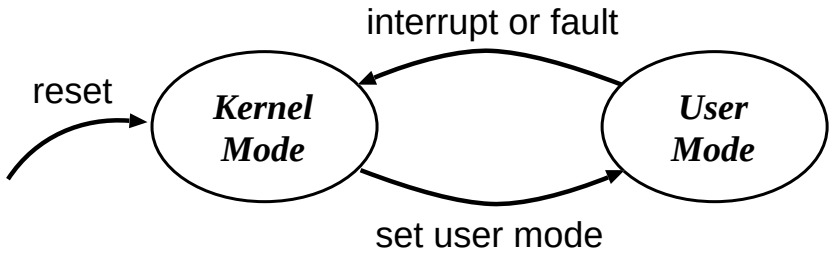

- Make certain machine instructions only possible in kernel mode. . .

Protecting I/O & Memory

- First try: make I/O instructions privileged.
  - applications can't mask interrupts.
  - applications can't control I/O devices.
- But:
  1. Application can rewrite interrupt vectors.
  2. Some devices accessed via *memory*
- Hence need to protect memory also. . .
- e.g. define a *base* and a *limit* for each program.

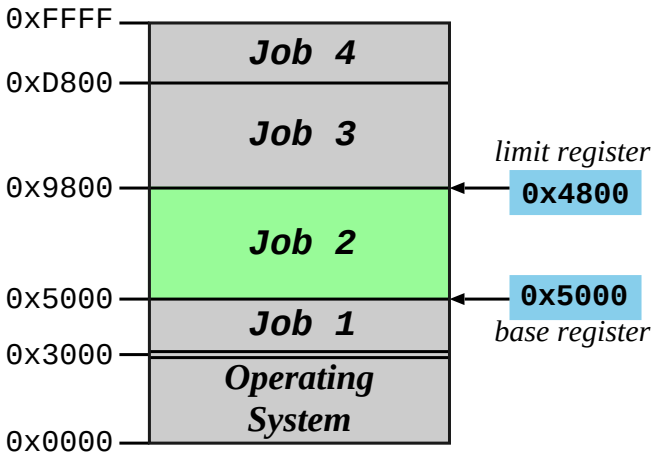

- Accesses outside allowed range are protected.

Memory Protection Hardware

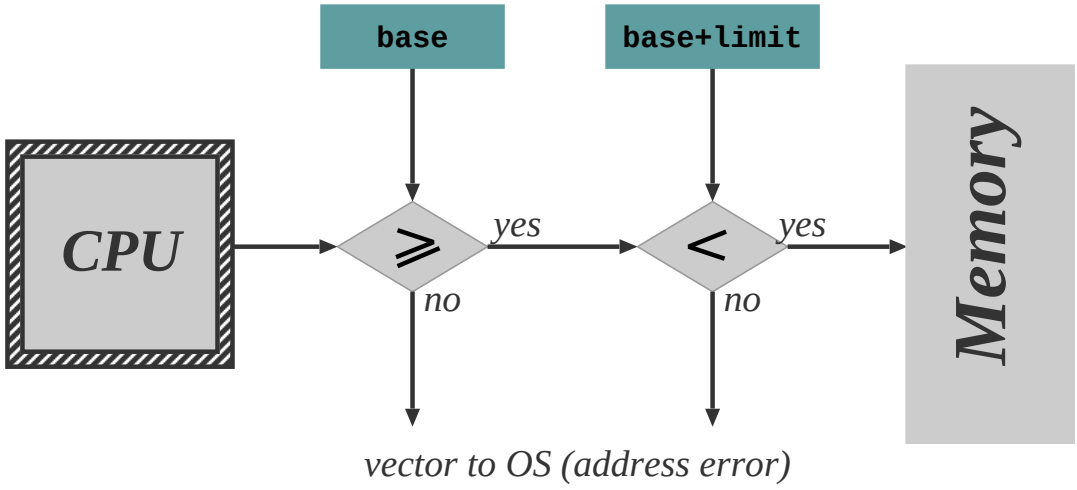

- Hardware checks every memory reference.
- Access out of range ⇒ vector into operating system (just as for an interrupt).
- Only allow *update* of base and limit registers in kernel mode.
- Typically disable memory protection in kernel mode (although a bad idea).
- In reality, more complex protection h/w used:
  - main schemes are *segmentation* and *paging*
  - (covered later on in course)

Protecting the CPU

- Need to ensure that the OS stays in control.
  - i.e. need to prevent any given application from 'hogging' the CPU the whole time.

  $\Rightarrow$ use a *timer* device.
- Usually use a *countdown* timer, e.g.
  1. set timer to initial value (e.g. `0xFFFF`).
  2. every *tick* (e.g. $1\mu s$), timer decrements value.
  3. when value hits zero, interrupt.
- (Modern timers have programmable tick rate.)
- Hence OS gets to run periodically and do its stuff.
- Need to ensure only OS can load timer, and that interrupt cannot be masked.
  - use same scheme as for other devices.
  - (viz. privileged instructions, memory protection)
- Same scheme can be used to implement time-sharing (more on this later).

Kernel-Based Operating Systems

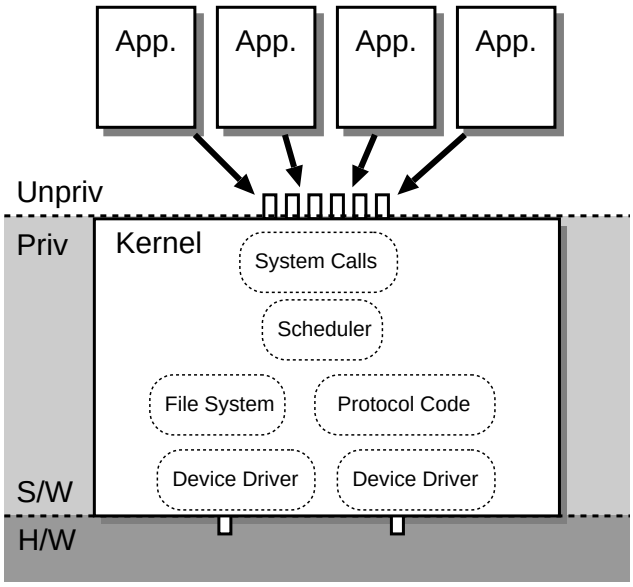

- Applications can't do I/O due to protection

  ⇒ operating system does it on their behalf.

- Need secure way for application to invoke operating system:

  ⇒ require a special (unprivileged) instruction to allow transition from user to kernel mode.

- Generally called a *software interrupt* since operates similarly to (hardware) interrupt. . .

- Set of OS services accessible via software interrupt mechanism called *system calls*.

Microkernel Operating Systems

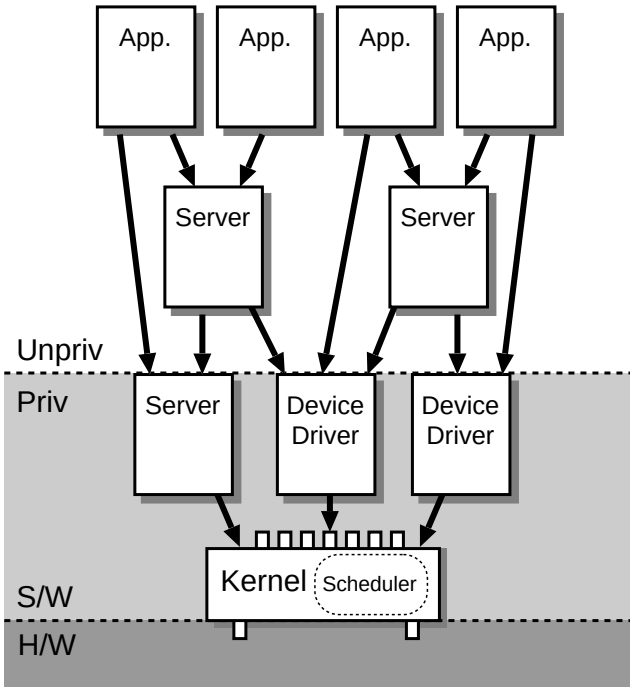

- Alternative structure:
  - push some OS services into *servers*.
  - servers may be privileged (i.e. operate in kernel mode).
- Increases both *modularity* and *extensibility*.
- Still access kernel via system calls, but need new way to access servers:

  ⇒ interprocess communication (IPC) schemes.

Kernels versus Microkernels

So why isn't everything a microkernel?

- Lots of IPC adds overhead

  $\Rightarrow$ microkernels usually perform less well.

- Microkernel implementation sometimes tricky: need to worry about synchronisation.

- Microkernels often end up with redundant copies of OS data structures.

Hence today most common operating systems blur the distinction between kernel and microkernel.

- e.g. linux is "kernel", but has kernel modules and certain servers.

- e.g. Windows NT was originally microkernel (3.5), but now (4.0 onwards) pushed lots back into kernel for performance.

- Still not clear what the best OS structure is, or how much it really matters. . .

Operating System Functions

- Regardless of structure, OS needs to *securely multiplex resources*, i.e.
  1. protect applications from each other, yet
  2. share physical resources between them.
- Also usually want to *abstract* away from grungy harware, i.e. OS provides a *virtual machine*:
  - share CPU (in time) and provide each application with a virtual processor,
  - allocate and protect memory, and provide applications with their own virtual address space,
  - present a set of (relatively) hardware independent virtual devices, and
  - divide up storage space by using filing systems.
- Remainder of this part of the course will look at each of the above areas in turn. . .

Process Concept

- From a user's point of view, the operating system is there to execute programs:
  - on batch system, refer to *jobs*
  - on interactive system, refer to *processes*
  - (we'll use both terms fairly interchangeably)
- Process $\neq$ Program:
  - a program is *static*, while a process is *dynamic*
  - in fact, a process $\triangleq$ "a program in execution"
- (Note: "program" here is pretty low level, i.e. native machine code or *executable*)
- Process includes:
  1. program counter
  2. stack
  3. data section
- Processes execute on *virtual processors*

Process States

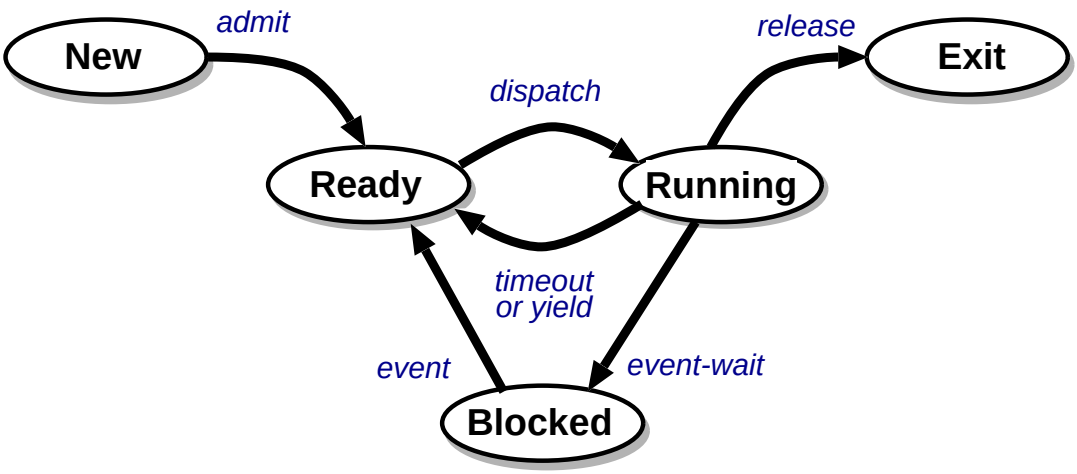

- As a process executes, it changes *state*:
  - *New*: the process is being created
  - *Running*: instructions are being executed
  - *Ready*: the process is waiting for the CPU (and is prepared to run at any time)
  - *Blocked*: the process is waiting for some event to occur (and cannot run until it does)
  - *Exit*: the process has finished execution.
- The operating system is responsible for maintaining the state of each process.

Process Control Block

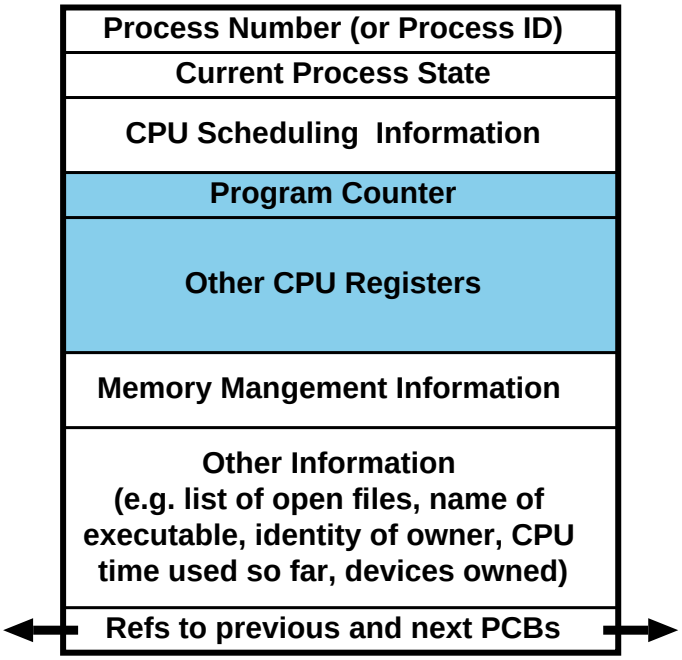

OS maintains information about every process in a data structure called a *process control block* (PCB):

- Unique process identifier
- Process state (*Running*, *Ready*, etc.)
- CPU scheduling & accounting information
- Program counter & CPU registers
- Memory management information
- . . .

Context Switching

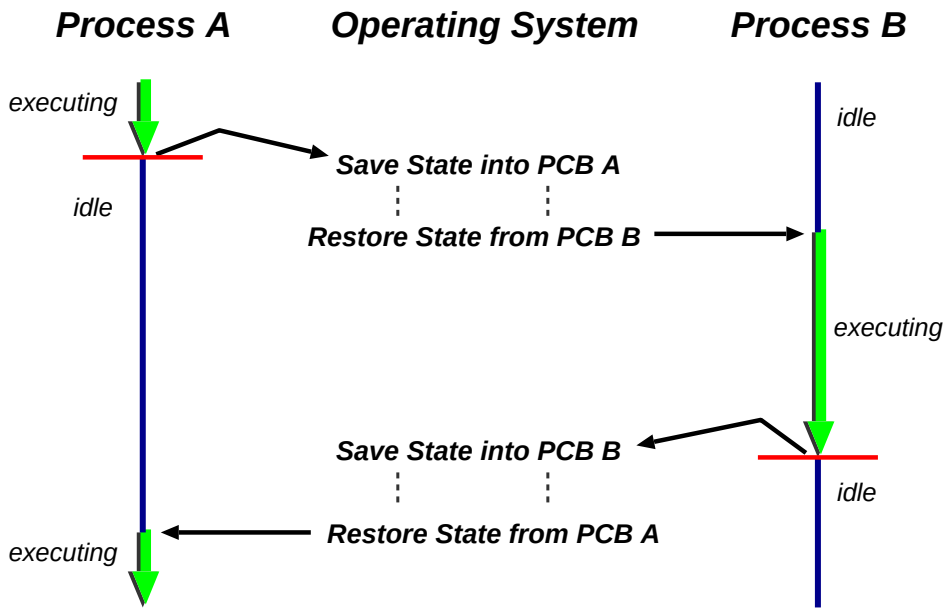

- *Process Context* = machine environment during the time the process is actively using the CPU.
- i.e. context includes program counter, general purpose registers, processor status register, . . .
- To switch between processes, the OS must:
  a) save the context of the currently executing process (if any), and
  b) restore the context of that being resumed.
- Time taken depends on h/w support.

Scheduling Queues

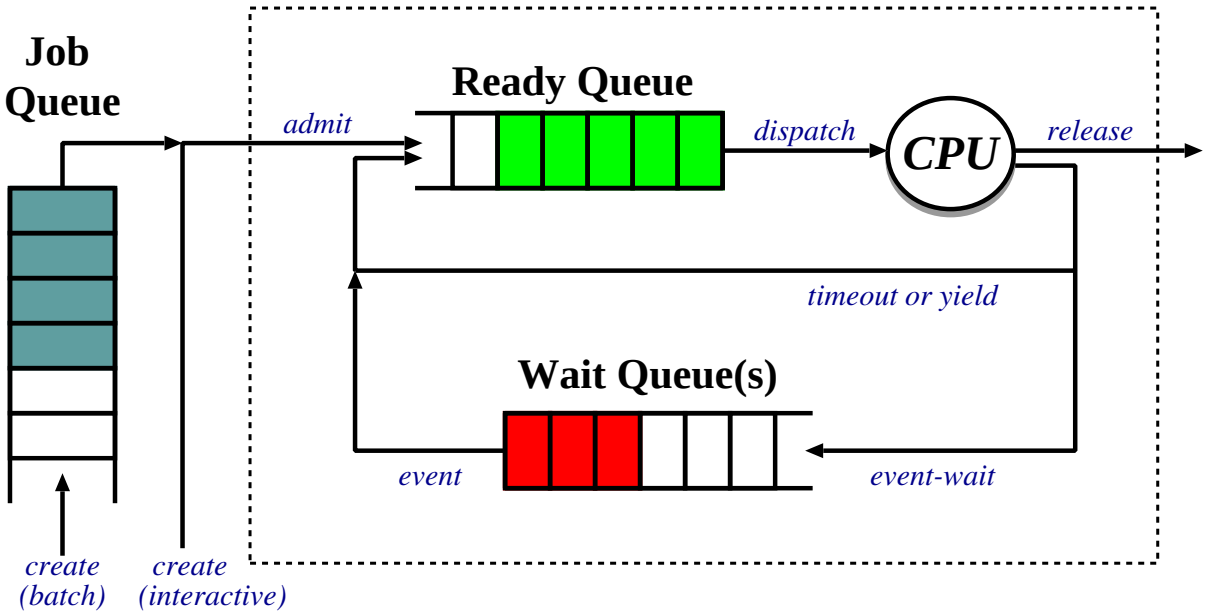

- Job Queue: batch processes awaiting admission.
- Ready Queue: set of all processes residing in main memory, ready and waiting to execute.
- Wait Queue(s): set of processes waiting for an I/O device (or for other processes)
- Long-term & short-term schedulers:
  - *Job scheduler* selects which processes should be brought into the ready queue.
  - *CPU scheduler* selects which process should be executed next and allocates CPU.

Process Creation

- Nearly all systems are *hierarchical*: parent processes create children processes.
- Resource sharing:
  - parent and children share all resources.
  - children share subset of parent's resources.
  - parent and child share no resources.
- Execution:
  - parent and children execute concurrently.
  - parent waits until children terminate.
- Address space:
  - child duplicate of parent.
  - child has a program loaded into it.
- e.g. Unix:
  - `fork()` system call creates a new process
  - all resources shared (child is a clone).
  - `execve()` system call used to replace the process' memory space with a new program.
- NT/2000: `CreateProcess()` system call includes name of program to be executed.

Process Termination

- Process executes last statement and asks the operating system to delete it (**exit**):
  - output data from child to parent (**wait**)
  - process' resources are deallocated by the OS.
- Process performs an illegal operation, e.g.
  - makes an attempt to access memory to which it is not authorised,
  - attempts to execute a privileged instruction
- Parent may terminate execution of child processes (**abort**, **kill**), e.g. because
  - child has exceeded allocated resources
  - task assigned to child is no longer required
  - parent is exiting ("cascading termination")
  - (many operating systems do not allow a child to continue if its parent terminates)
- e.g. Unix has `wait()`, `exit()` and `kill()`
- e.g. NT/2000 has `ExitProcess()` for self and `TerminateProcess()` for others.

Process Blocking

- In general a process blocks on an *event*, e.g.
  - an I/O device completes an operation,
  - another process sends a message
- Assume OS provides some kind of general-purpose blocking primitive, e.g. `await()`.
- Need care handling *concurrency* issues, e.g.

```
if(no key being pressed) {
   await(keypress);
   print("Key has been pressed!\n");
}
// handle keyboard input
```

  What happens if a key is pressed at the first '{' ?

- (This is a *big* area: lots more detail next year.)
- In this course we'll generally assume that problems of this sort do not arise.

CPU-I/O Burst Cycle

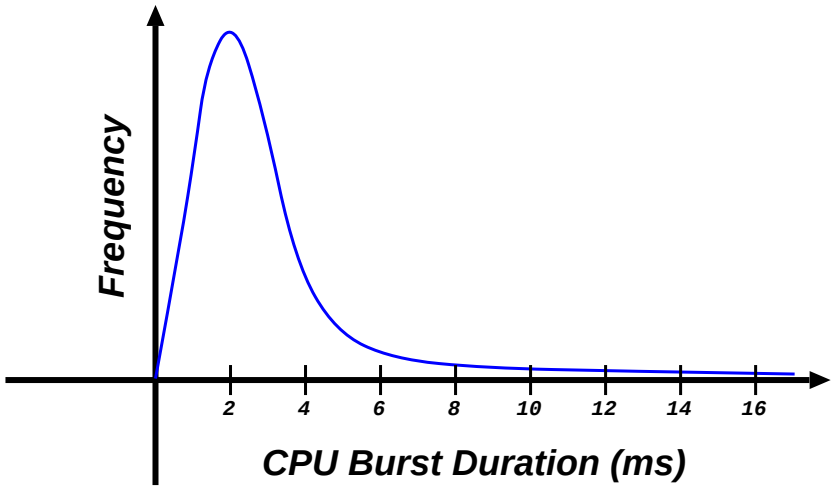

- CPU-I/O Burst Cycle: process execution consists of a *cycle* of CPU execution and I/O wait.
- Processes can be described as either:
  1. I/O-bound: spends more time doing I/O that than computation; has many short CPU bursts.
  2. CPU-bound: spends more time doing computations; has few very long CPU bursts.
- Observe most processes execute for at most a few milliseconds before blocking

$\Rightarrow$ need multiprogramming to obtain decent overall CPU utilization.

CPU Scheduler

Recall: CPU scheduler selects one of the ready processes and allocates the CPU to it.

- There are a number of occasions when we can/must choose a new process to run:
  1. a running process blocks (`running` $\rightarrow$ `blocked`)
  2. a timer expires (`running` $\rightarrow$ `ready`)
  3. a waiting process unblocks (`blocked` $\rightarrow$ `ready`)
  4. a process terminates (`running` $\rightarrow$ `exit`)
- If only make scheduling decision under 1, 4 $\Rightarrow$ have a *non-preemptive* scheduler:

✔ simple to implement
✘ open to denial of service
– e.g. Windows 3.11, early MacOS.

- Otherwise the scheduler is *preemptive*.

✔ solves denial of service problem
✘ more complicated to implement
✘ introduces concurrency problems. . .

Idle system

What do we do if there is no ready process?

- halt processor (until interrupt arrives)
  - ✔ saves power (and heat!)
  - ✔ increases processor lifetime
  - ✘ might take too long to stop and start.
- busy wait in scheduler
  - ✔ quick response time
  - ✘ ugly, useless
- invent idle process, always available to run
  - ✔ gives uniform structure
  - ✔ could use it to run checks
  - ✘ uses some memory
  - ✘ can slow interrupt response

In general there is a trade-off between responsiveness and usefulness.

Scheduling Criteria

A variety of metrics may be used:

1. CPU utilization: the fraction of the time the CPU is being used (and not for idle process!)
2. Throughput: # of processes that complete their execution per time unit.
3. Turnaround time: amount of time to execute a particular process.
4. Waiting time: amount of time a process has been waiting in the ready queue.
5. Response time: amount of time it takes from when a request was submitted until the first response is produced (in time-sharing systems)

Sensible scheduling strategies might be:

- Maximize throughput or CPU utilization
- Minimize average turnaround time, waiting time or response time.

Also need to worry about *fairness* and *liveness*.

First-Come First-Served Scheduling

- FCFS depends on order processes arrive, e.g.

Process	Burst Time
P_1	25
P_2	4
P_3	7

- If processes arrive in the order P_1, P_2, P_3:

  - Waiting time for P_1=0; P_2=25; P_3=29;
  - Average waiting time: $(0 + 25 + 29)/3 = 18$.

- If processes arrive in the order P_3, P_2, P_1:

  - Waiting time for P_1=11; P_2=7; P_3=0;
  - Average waiting time: $(11 + 7 + 0)/3 = 6$.
  - i.e. three times as good!

- First case poor due to *convoy effect*.

SJF Scheduling

Intuition from FCFS leads us to *shortest job first* (SJF) scheduling.

- Associate with each process the length of its next CPU burst.
- Use these lengths to schedule the process with the shortest time (FCFS can be used to break ties).

For example:

Process	Arrival Time	Burst Time
P_1	0	7
P_2	2	4
P_3	4	1
P_4	5	4

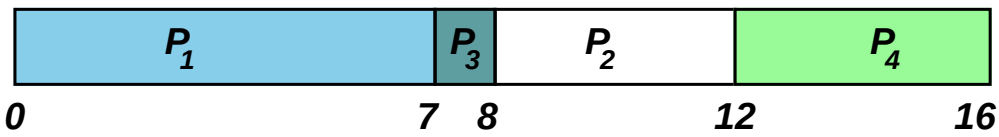

- Waiting time for P_1=0; P_2=6; P_3=3; P_4=7;
- Average waiting time: $(0 + 6 + 3 + 7)/4 = 4$.

SJF is optimal in that it gives the minimum average waiting time for a given set of processes.

SRTF Scheduling

- SRTF = Shortest Remaining-Time First.
- Just a preemptive version of SJF.
- i.e. if a new process arrives with a CPU burst length less than the *remaining time* of the current executing process, preempt.

For example:

Process	Arrival Time	Burst Time
P_1	0	7
P_2	2	4
P_3	4	1
P_4	5	4

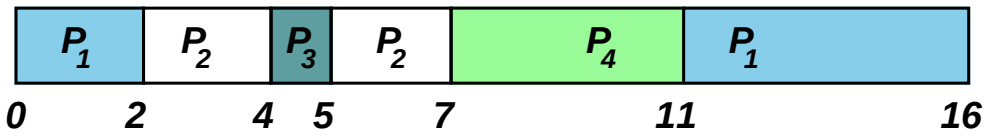

- Waiting time for P_1=9; P_2=1; P_3=0; P_4=2;
- Average waiting time: $(9 + 1 + 0 + 2)/4 = 3$.

What are the problems here?

Predicting Burst Lengths

- For both SJF and SRTF require the next "burst length" for each process $\Rightarrow$ need to estimate it.
- Can be done by using the length of previous CPU bursts, using exponential averaging:
  1. t_n = actual length of nth CPU burst.
  2. τ_{n+1} = predicted value for next CPU burst.
  3. For $\alpha, 0 \leq \alpha \leq 1$ define:

$$\tau_{n+1} = \alpha t_n + (1 - \alpha)\tau_n$$

- If we expand the formula we get:

$$\tau_{n+1} = \alpha t_n + \ldots + (1-\alpha)^j \alpha t_{n-j} + \ldots + (1-\alpha)^{n+1}\tau_0$$

  where τ_0 is some constant.
- Choose value of α according to our belief about the system, e.g. if we believe history irrelevant, choose $\alpha \approx 1$ and then get $\tau_{n+1} \approx t_n$.
- In general an exponential averaging scheme is a good predictor if the variance is small.

Round Robin Scheduling

Define a small fixed unit of time called a *quantum* (or *time-slice*), typically 10-100 milliseconds. Then:

- Process at the front of the ready queue is allocated the CPU for (up to) one quantum.
- When the time has elapsed, the process is preempted and appended to the ready queue.

Round robin has some nice properties:

- Fair: if there are n processes in the ready queue and the time quantum is q, then each process gets $1/n^{th}$ of the CPU.
- Live: no process waits more than $(n-1)q$ time units before receiving a CPU allocation.
- Typically get higher average turnaround time than SRTF, but better average *response time*.

But tricky choosing correct size quantum:

- q too large $\Rightarrow$ FCFS/FIFO
- q too small $\Rightarrow$ context switch overhead too high.

Static Priority Scheduling

- Associate an (integer) priority with each process
- For example:

0	system internal processes
1	interactive processes (staff)
2	interactive processes (students)
3	batch processes.

- Then allocate CPU to the highest priority process:
  - 'highest priority' typically means smallest integer
  - get preemptive and non-preemptive variants.
- e.g. SJF is a priority scheduling algorithm where priority is the predicted next CPU burst time.
- Problem: how to resolve ties?
  - round robin with time-slicing
  - allocate quantum to each process in turn.
  - Problem: biased towards CPU intensive jobs.
    - per-process quantum based on usage?
    - ignore?
- Problem: starvation. . .

Dynamic Priority Scheduling

- Use same scheduling algorithm, but allow priorities to change over time.
- e.g. simple aging:
  - processes have a (static) *base priority* and a dynamic *effective priority*.
  - if process starved for k seconds, increment effective priority.
  - once process runs, reset effective priority.
- e.g. computed priority:
  - first used in Dijkstra's THE
  - time slots: $\ldots, t, t+1, \ldots$
  - in each time slot t, measure the CPU usage of process j: u^j
  - priority for process j in slot $t+1$: $p^j_{t+1} = f(u^j_t, p^j_t, u^j_{t-1}, p^j_{t-1}, \ldots)$
  - e.g. $p^j_{t+1} = p^j_t/2 + ku^j_t$
  - penalises CPU bound $\rightarrow$ supports I/O bound.
- today such computation considered acceptable. . .

Memory Management

In a multiprogramming system:

- many processes in memory simultaneously
- every process needs memory for:
  - instructions ("code" or "text"),
  - static data (in program), and
  - dynamic data (heap and stack).
- in addition, operating system itself needs memory for instructions and data.

$\Rightarrow$ must share memory between OS and k processes.

The memory magagement subsystem handles:

1. Relocation
2. Allocation
3. Protection
4. Sharing
5. Logical Organisation
6. Physical Organisation

The Address Binding Problem

Consider the following simple program:

```
int x, y;
x = 5;
y = x + 3;
```

We can imagine that this would result in some assembly code which looks something like:

```
str #5, [Rx]          // store 5 into 'x'
ldr R1, [Rx]          // load value of x from memory
add R2, R1, #3        // and add 3 to it
str R2, [Ry]          // and store result in 'y'
```

where the expression '`[ addr ]`' means "the contents of the memory at address `addr`".

Then the address binding problem is:

what values do we give Rx and Ry ?

This is a problem because we don't know where in memory our program will be loaded when we run it:

- e.g. if loaded at 0x1000, then `x` and `y` might be stored at 0x2000, but if loaded at 0x5000, then `x` and `y` might be at 0x6000.

Address Binding and Relocation

To solve the problem, we need to translate between "program addresses" and "real addresses".

This can be done:

- at compile time:
  - requires knowledge of absolute addresses
  - e.g. DOS .com files
- at load time:
  - when program loaded, work out position in memory and update code with correct addresses
  - must be done every time program is loaded
  - ok for embedded systems / boot-loaders
- at run-time:
  - get some hardware to automatically translate between program and real addresses.
  - no changes at all required to program itself.
  - most popular and flexible scheme, providing we have the requisite hardware (MMU).

Logical vs Physical Addresses

Mapping of logical to physical addresses is done at run-time by Memory Management Unit (MMU), e.g.

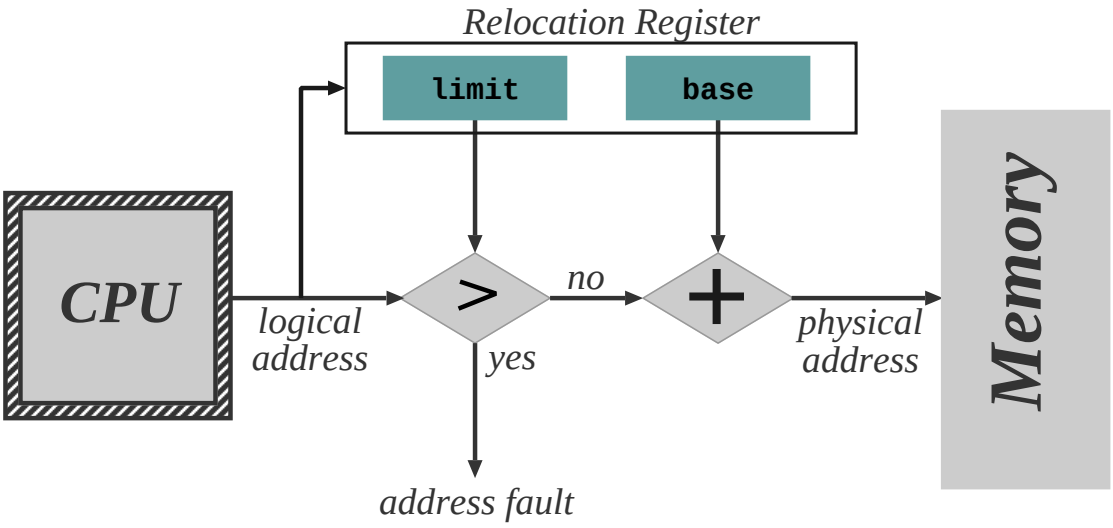

1. Relocation register holds the value of the base address owned by the process.
2. Relocation register contents are added to each memory address before it is sent to memory.
3. e.g. DOS on 80x86 — 4 relocation registers, logical address is a tuple (s, o).
4. NB: process never sees physical address — simply manipulates logical addresses.
5. OS has privilege to update relocation register.

Contiguous Allocation

Given that we want multiple virtual processors, how can we support this in a single address space?

Where do we put processes in memory?

- OS typically must be in low memory due to location of interrupt vectors
- Easiest way is to statically divide memory into multiple fixed size partitions:
  - bottom partition contains OS, remaining partitions each contain exactly one process.
  - when a process terminates its partition becomes available to new processes.
  - e.g. OS/360 MFT.
- Need to protect OS and user processes from malicious programs:
  - use base and limit registers in MMU
  - update values when a new processes is scheduled
  - NB: solving both relocation and protection problems at the same time!

Static Multiprogramming

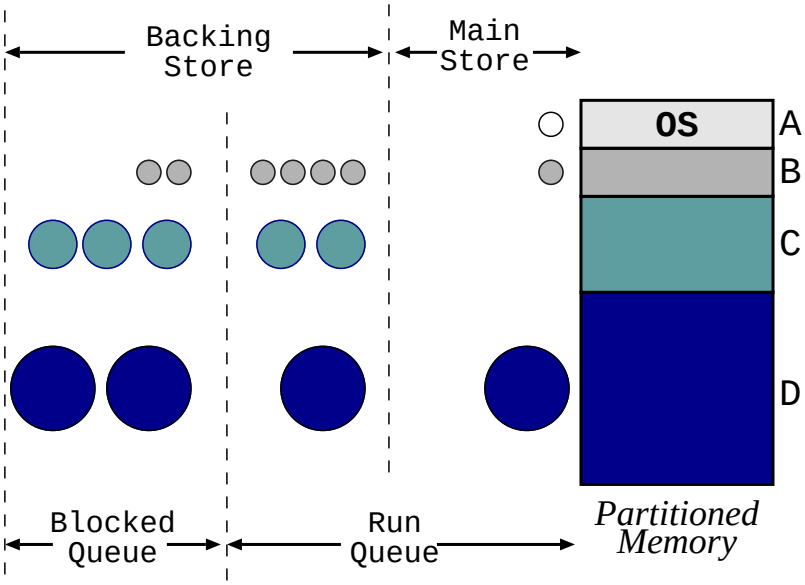

- partition memory when installing OS, and allocate pieces to different job queues.
- associate jobs to a job queue according to size.
- swap job back to disk when:
  - blocked on I/O (assuming I/O is slower than the backing store).
  - time sliced: larger the job, larger the time slice
- run job from another queue while swapping jobs
- e.g. IBM OS/360 MVT, ICL System 4
- problems: fragmentation, cannot grow partitions.

Dynamic Partitioning

Get more flexibility if allow partition sizes to be dynamically chosen (e.g. OS/360 MVT) :

- OS keeps track of which areas of memory are available and which are occupied.
- e.g. use one or more *linked lists*:

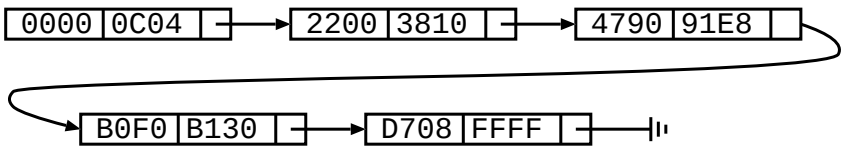

- When a new process arrives the OS searches for a hole large enough to fit the process.
- To determine which hole to use for new process:
  - **first fit**: stop searching list as soon as big enough hole is found.
  - **best fit**: search entire list to find "best" fitting hole (i.e. smallest hole large enough)
  - **worst fit**: counterintuitively allocate largest hole (again must search entire list).
- When process terminates its memory returns onto the free list, coalescing holes where appropriate.

Scheduling Example

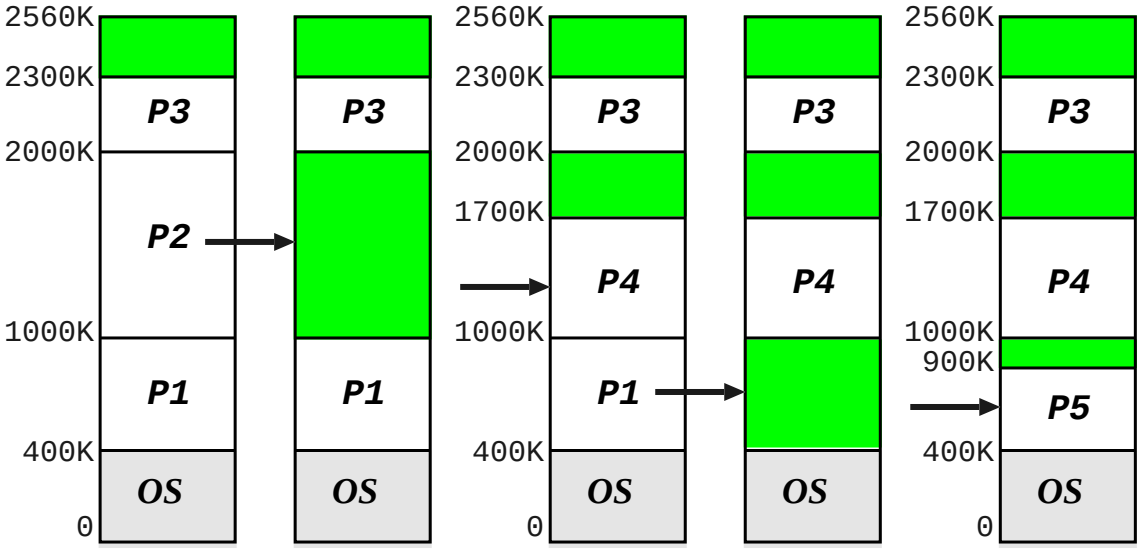

- Consider machine with total of 2560K memory.
- Operating System requires 400K.
- The following jobs are in the queue:

Process	Memory	Time
P_1	600K	10
P_2	1000K	5
P_3	300K	20
P_4	700K	8
P_5	500K	15

External Fragmentation

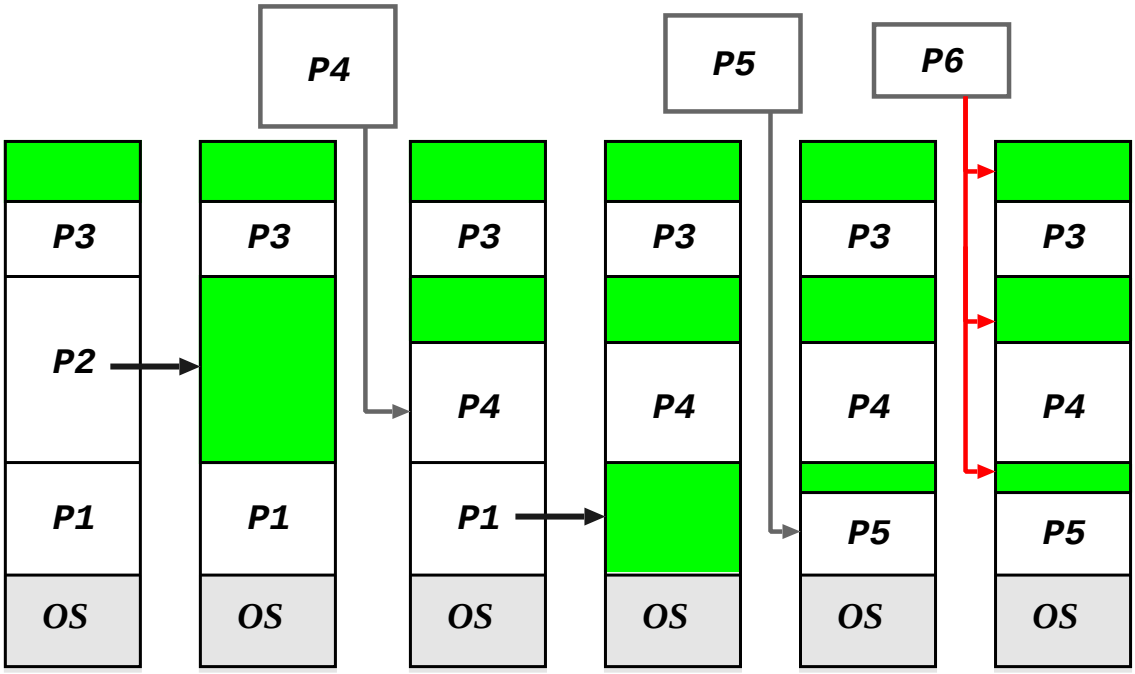

- Dynamic partitioning algorithms suffer from external fragmentation: as processes are loaded they leave little fragments which may not be used.
- **External fragmentation** exists when the total available memory is sufficient for a request, but is unusable because it is split into many holes.
- Can also have problems with tiny holes

Solution: compact holes periodically.

Compaction

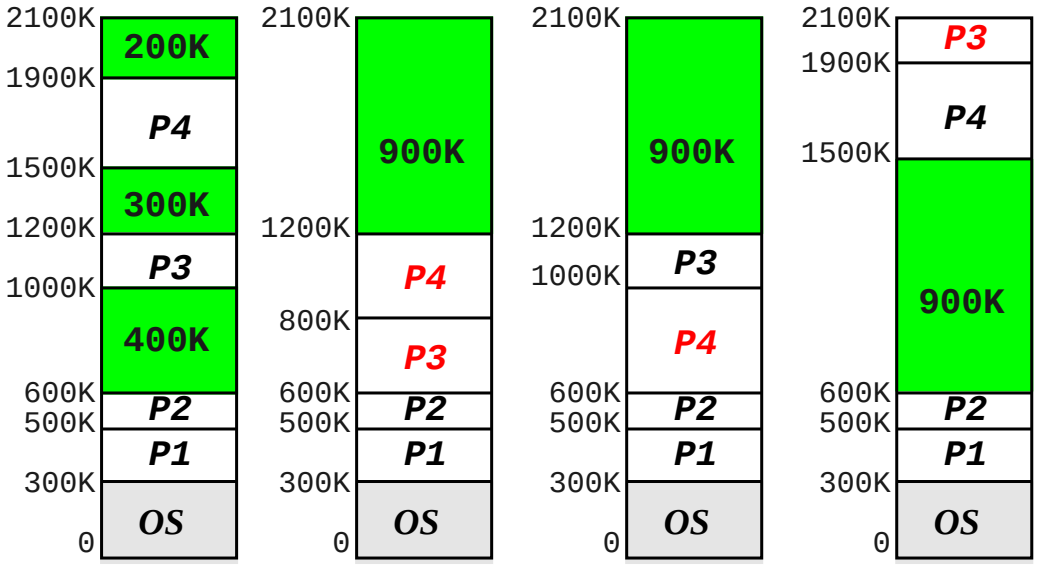

Choosing optimal strategy quite tricky. . .

Note that:

- Require run-time relocation.
- Can be done more efficiently when process is moved into memory from a swap.
- Some machines used to have hardware support (e.g. CDC Cyber).

Also get fragmentation in *backing store*, but in this case compaction not really viable. . .

Paged Virtual Memory

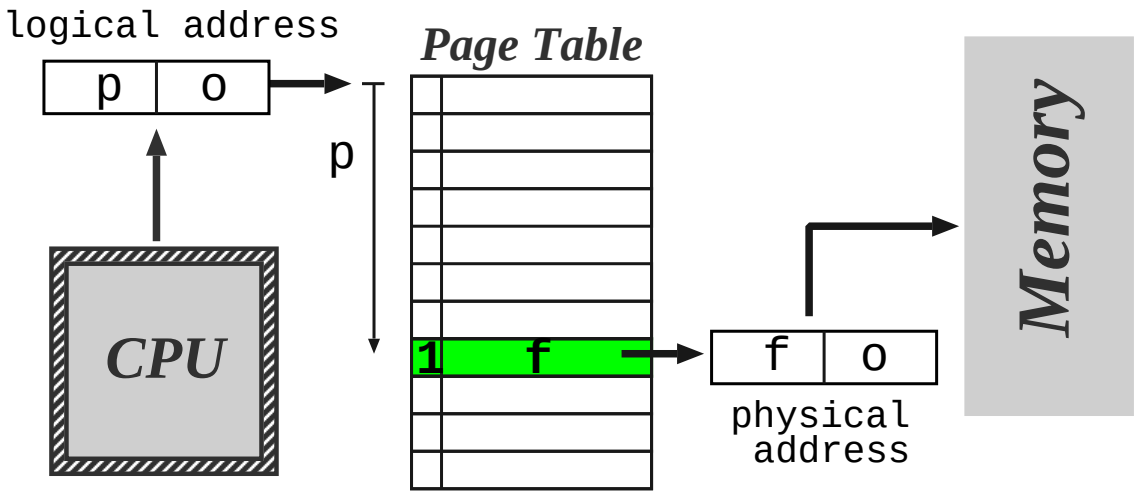

Another solution is to allow a process to exist in non-contiguous memory, i.e.

- divide physical memory into relatively small blocks of fixed size, called *frames*
- divide logical memory into blocks of the same size called *pages* (typical value is 4K)
- each address generated by CPU is composed of a page number p and page offset o.
- MMU uses p as an index into a *page table*.
- page table contains associated frame number f
- usually have $|\mathtt{p}| \gg |\mathtt{f}| \Rightarrow$ need valid bit.

Paging Pros and Cons

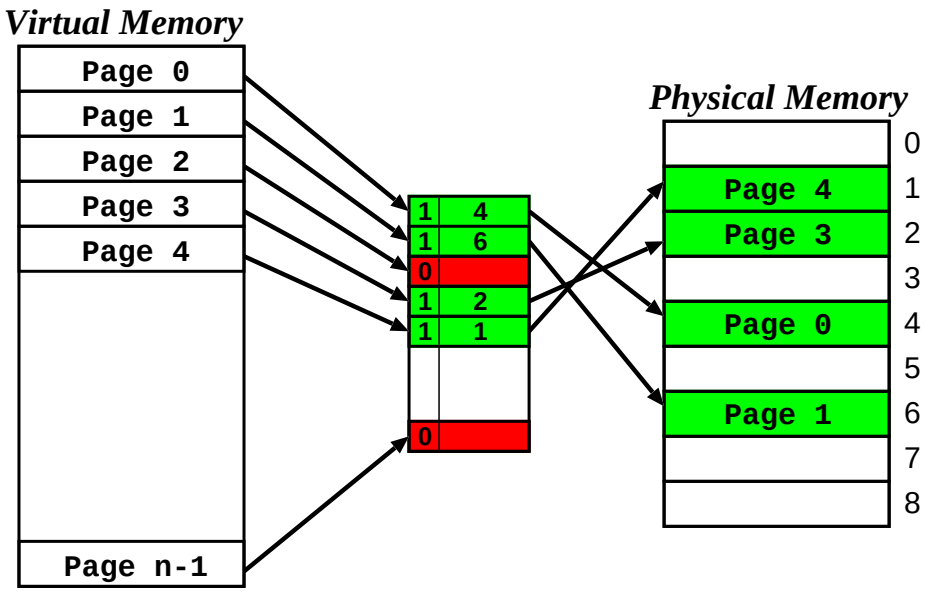

- ✔ memory allocation easier.
- ✘ OS must keep page table per process
- ✔ no external fragmentation (in physical memory at least).
- ✘ but get **internal fragmentation**.
- ✔ clear separation between user and system view of memory usage.
- ✘ additional overhead on context switching

Structure of the Page Table

Different kinds of hardware support can be provided:

- Simplest case: set of dedicated relocation registers
  - one register per page
  - OS loads the registers on context switch
  - fine if the page table is small. . . but what if have large number of pages ?
- Alternatively keep page table in memory
  - only one register needed in MMU (page table base register (PTBR))
  - OS switches this when switching process
- Problem: page tables might still be very big.
  - can keep a page table length register (PTLR) to indicate size of page table.
  - or can use more complex structure (see later)
- Problem: need to refer to memory *twice* for every 'actual' memory reference. . .

$\Rightarrow$ use a translation lookaside buffer (TLB)

TLB Operation

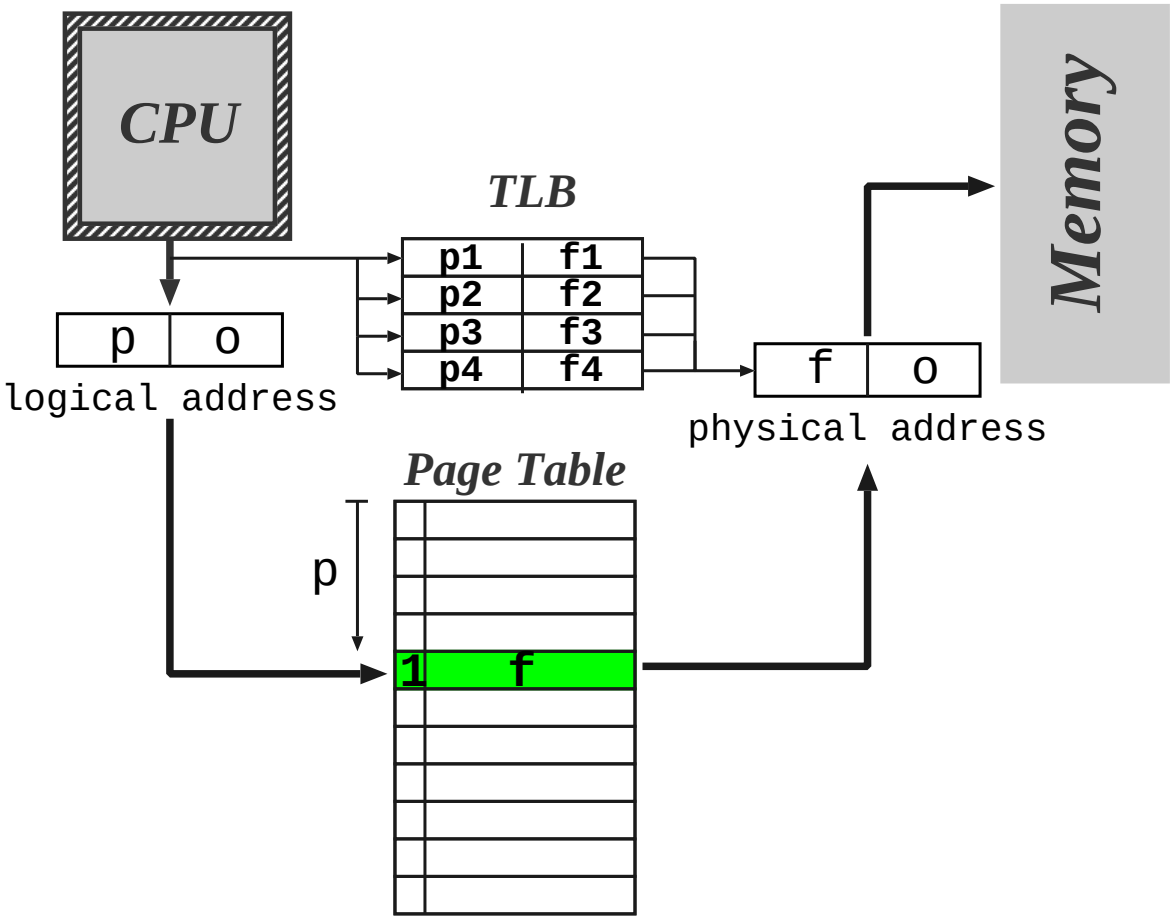

- On memory reference present TLB with logical memory address
- If page table entry for the page is present then get an immediate result
- If not then make memory reference to page tables, and update the TLB

Multilevel Page Tables

- Most modern systems can support very large ($2^{32}, 2^{64}$) address spaces.
- Solution – split page table into several sub-parts
- Two level paging – page the page table

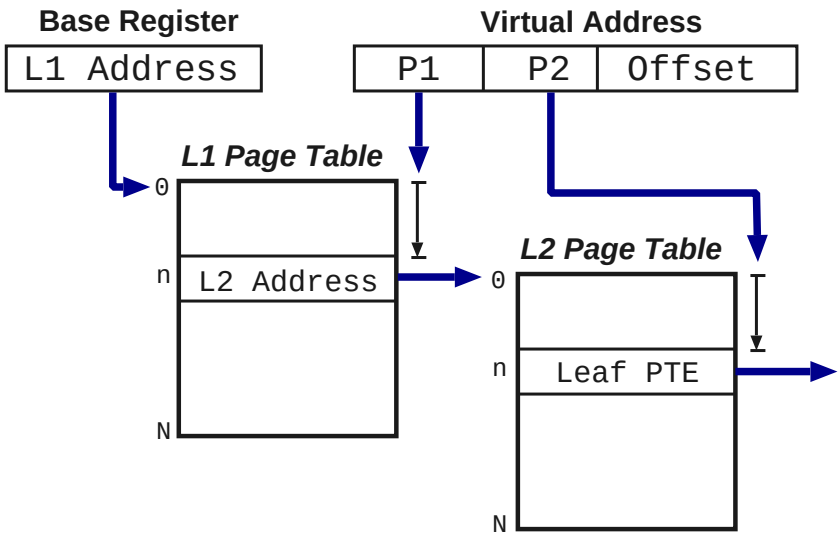

- For 64 bit architectures a two-level paging scheme is not sufficient: need further levels.
- (even some 32 bit machines have > 2 levels).

Example: x86

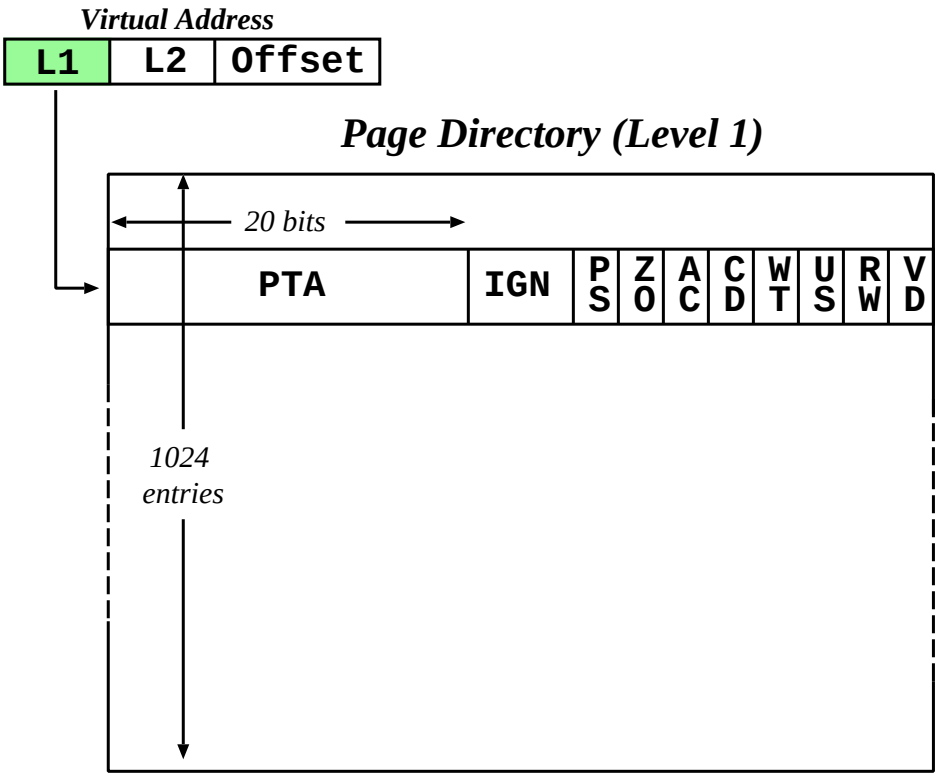

- Page size 4K (or 4Mb).
- First lookup is in the *page directory*: index using most 10 significant bits.
- Address of page directory stored in internal processor register (`cr3`).
- Results (normally) in the address of a *page table*.

Example: x86 (2)

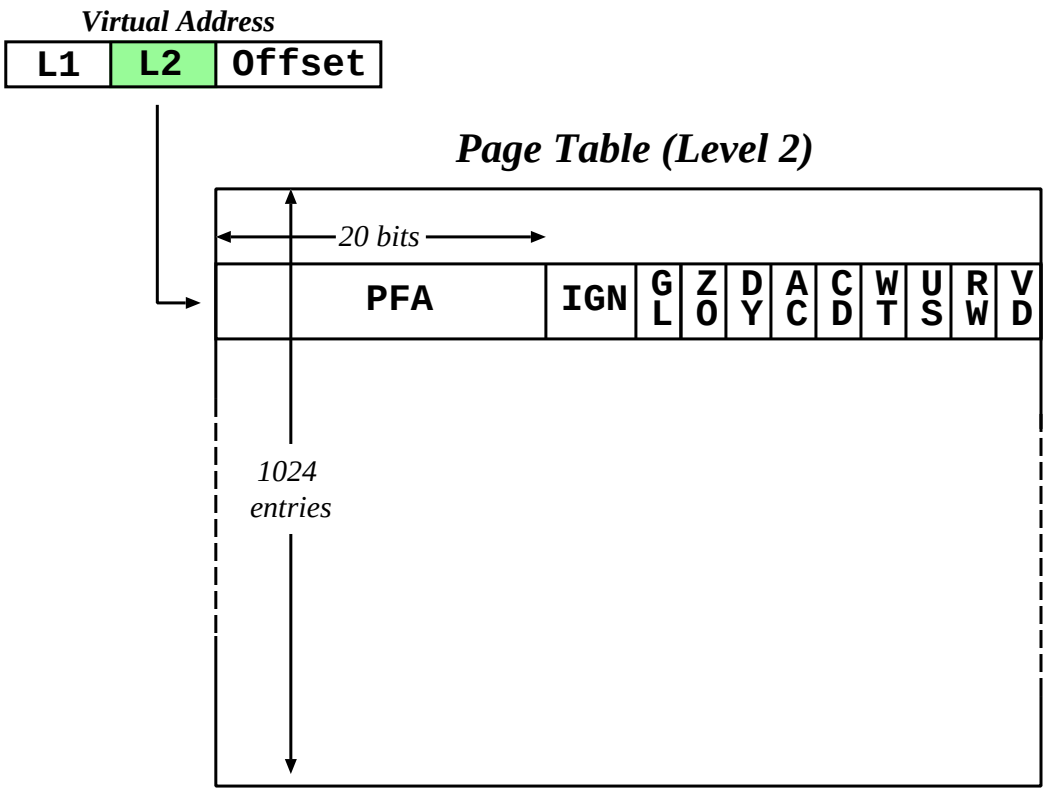

- Use next 10 bits to index into page table.
- Once retrieve page frame address, add in the offset (i.e. the low 12 bits).
- Notice page directory and page tables are exactly one page each themselves.

Protection Issues

- Associate protection bits with each page – kept in page tables (and TLB).
- e.g. one bit for read, one for write, one for execute.
- May also distinguish whether may only be accessed when executing in *kernel mode*, e.g.

Frame Number	K	R	W	X	V

- At the same time as address is going through page hardware, can check protection bits.
- Attempt to violate protection causes h/w trap to operating system code
- As before, have *valid/invalid* bit determining if the page is mapped into the process address space:
  - if invalid ⇒ trap to OS handler
  - can do lots of interesting things here, particularly with regard to sharing. . .

Shared Pages

Another advantage of paged memory is code/data sharing, for example:

- binaries: editor, compiler etc.
- libraries: shared objects, dlls.

So how does this work?

- Implemented as two logical addresses which map to one physical address.
- If code is *re-entrant* (i.e. stateless, non-self modifying) it can be easily shared between users.
- Otherwise can use *copy-on-write* technique:
  - mark page as read-only in all processes.
  - if a process tries to write to page, will trap to OS fault handler.
  - can then allocate new frame, copy data, and create new page table mapping.
- (may use this for lazy data sharing too).

Requires additional book-keeping in OS, but worth it, e.g. over 40Mb of shared code on my linux box.

Segmentation

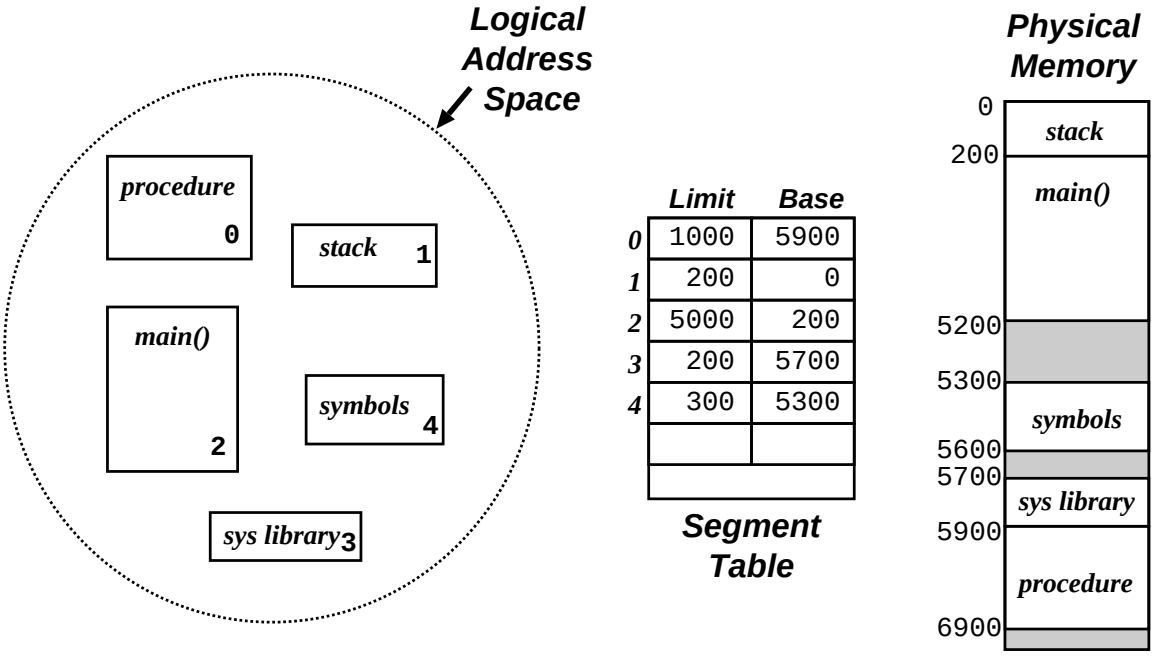

- User prefers to view memory as a set of segments of no particular size, with no particular ordering
- Segmentation supports this user-view of memory — logical address space is a collection of (typically disjoint) segments.
- Segments have a name (or a number) and a length — addresses specify segment and offset.
- Contrast with paging where user is unaware of memory structure (all managed invisibly).

Implementing Segments

- Maintain a segment table for each process:

Segment	Access	Base	Size	Others!

- If program has a very large number of segments then the table is kept in memory, pointed to by ST base register STBR
- Also need a ST length register STLR since number of segs used by different programs will differ widely
- The table is part of the process context and hence is changed on each process switch.

Algorithm:

1. Program presents address (s, d).
   Check that $s <$ STLR. If not, fault
2. Obtain table entry at reference $s+$ STBR, a tuple of form (b_s, l_s)
3. If $0 \leq d < l_s$ then this is a valid address at location (b_s, d), else fault

Sharing and Protection

- Big advantage of segmentation is that protection is per segment; i.e. corresponds to logical view.
- Protection bits associated with each ST entry checked in usual way
- e.g. instruction segments (should be non-self modifying!) thus protected against writes etc.
- e.g. place each array in own seg $\Rightarrow$ array limits checked by hardware
- Segmentation also facilitates sharing of code/data
  - each process has its own STBR/STLR
  - sharing is enabled when two processes have entries for the same physical locations.
  - for data segments can use copy-on-write as per paged case.
- Several subtle caveats exist with segmentation — e.g. jumps within shared code.

Sharing Segments

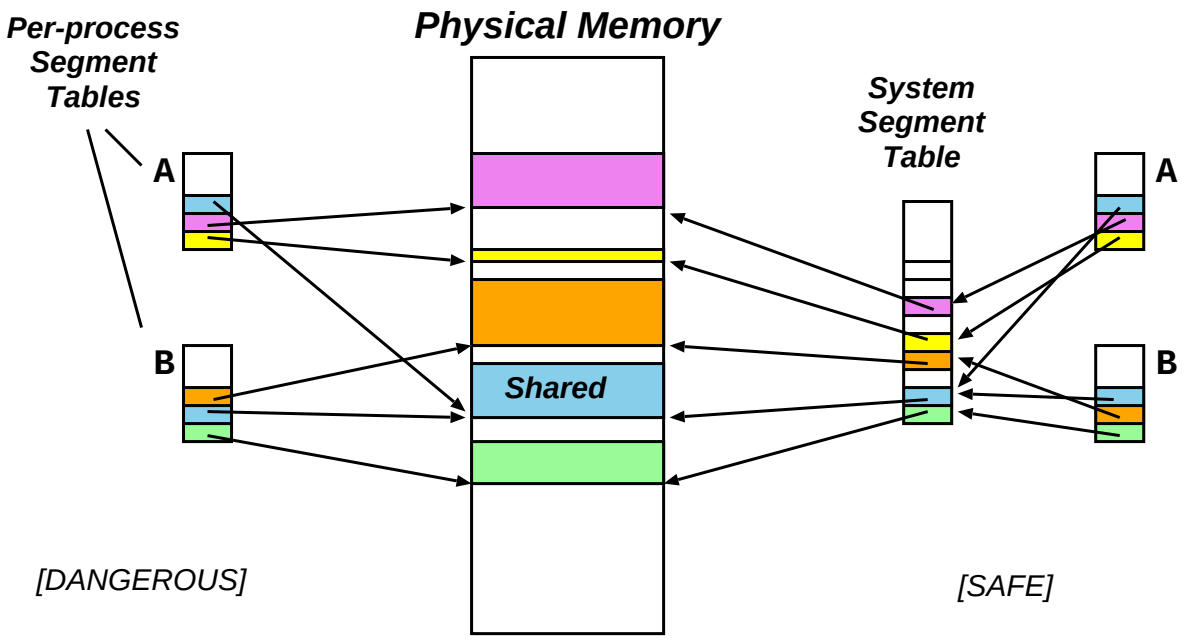

Sharing segments:

- wasteful (and dangerous) to store common information on shared segment in each process segment table
- assign each segment a unique System Segment Number (SSN)
- process segment table simply maps from a Process Segment Number (PSN) to SSN

External Fragmentation Returns. . .

- Long term scheduler must find spots in memory for all segments of a program.
- Problem now is that segs are of variable size $\Rightarrow$ leads to fragmentation.
- Tradeoff between compaction/delay depends on average segment size
- Extremes: each process 1 seg — reduces to variable sized partitions
- Or each byte one seg separately relocated — quadruples memory use!
- Fixed size small segments $\equiv$ paging!
- In general with small average segment sizes, external fragmentation is small.

I/O Hardware

- Wide variety of 'devices' which interact with the computer via I/O, e.g.
  - Human readable: graphical displays, keyboard, mouse, printers
  - Machine readable: disks, tapes, CD, sensors
  - Communications: modems, network interfaces
- They differ significantly from one another with regard to:
  - Data rate
  - Complexity of control
  - Unit of transfer
  - Direction of transfer
  - Data representation
  - Error handling

$\Rightarrow$ difficult to present a uniform I/O system which hides all the complexity.

I/O subsystem is generally the 'messiest' part of OS.

I/O Subsystem

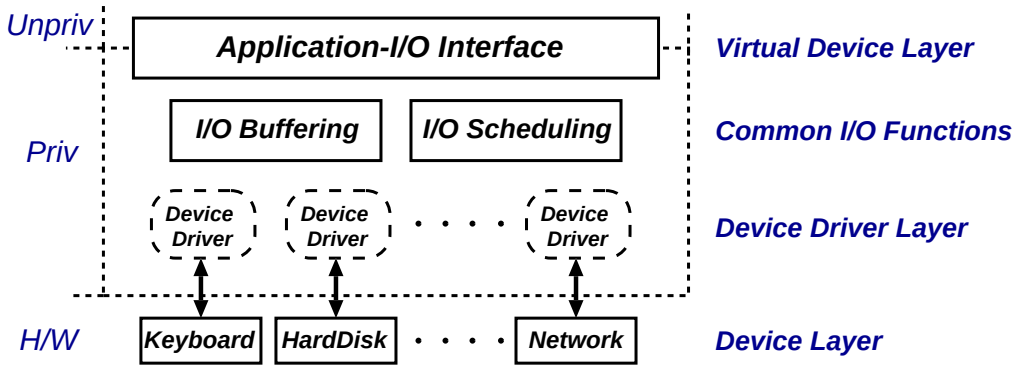

- Programs access *virtual devices*:
  - terminal streams not terminals
  - windows not frame buffer
  - event stream not raw mouse
  - files not disk blocks
  - printer spooler not parallel port
  - transport protocols not raw ethernet
- OS deals with processor–device interface:
  - I/O instructions versus memory mapped
  - I/O hardware type (e.g. 10's of serial chips)
  - polled versus interrupt driven
  - processor interrupt mechanism

Polled Mode I/O

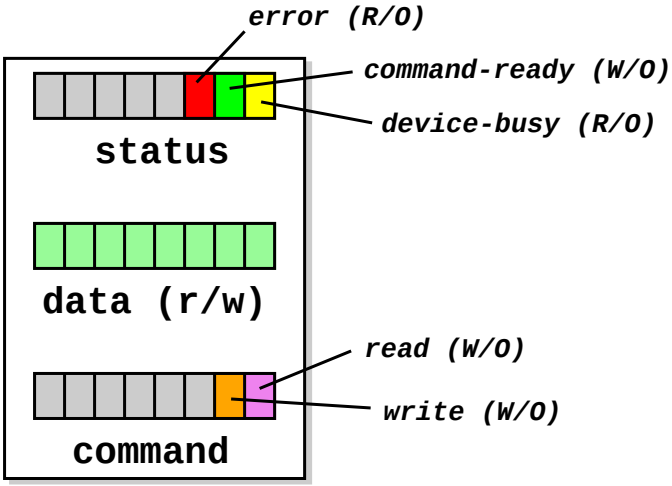

- Consider a simple device with three registers: `status`, `data` and `command`.
- (Host can read and write these via bus)
- Then polled mode operation works as follows:

  H repeatedly reads `device_busy` until clear.
  H sets e.g. `write` bit in `command` register, and puts data into `data` register.
  H sets `command_ready` bit in `status` register.
  D sees `command_ready` and sets `device_busy`.
  D performs write operation.
  D clears `command_ready` & then `device_busy`.

- What's the problem here?

Interrupts Revisited

Recall: to handle mismatch between CPU and device speeds, processors provide an *interrupt mechanism*:

- at end of each instruction, processor checks interrupt line(s) for pending interrupt
- if line is asserted then processor:
  - saves program counter,
  - saves processor status,
  - changes processor mode, and
  - jump to well known address (or its contents)
- after interrupt-handling routine is finished, can use e.g. the `rti` instruction to resume.

Some more complex processors provide:

- multiple levels of interrupts
- hardware vectoring of interrupts
- mode dependent registers

Interrupt-Driven I/O

Can split implementation into low-level *interrupt handler* plus per-device *interrupt service routine*:

- Interrupt handler (processor-dependent) may:
  - save more registers.
  - establish a language environment.
  - demultiplex interrupt in software.
  - invoke appropriate interrupt service routine (ISR)
- Then ISR (device- not processor-specific) will:
  1. for programmed I/O device:
     - transfer data.
     - clear interrupt (sometimes a side effect of tx).
  1. for DMA device:
     - acknowledge transfer.
  2. request another transfer if there are any more I/O requests pending on device.
  3. signal any waiting processes.
  4. enter scheduler or return.

Question: who is scheduling who?

Device Classes

Homogenising device API completely not possible
$\Rightarrow$ OS generally splits devices into four *classes*:

1. Block devices (e.g. disk drives, CD):
   - commands include `read`, `write`, `seek`
   - raw I/O or file-system access
   - memory-mapped file access possible
2. Character devices (e.g. keyboards, mice, serial):
   - commands include `get`, `put`
   - libraries layered on top to allow line editing
3. Network Devices
   - varying enough from block and character to have own interface
   - Unix and Windows/NT use *socket* interface
4. Miscellaneous (e.g. clocks and timers)
   - provide current time, elapsed time, timer
   - `ioctl` (on UNIX) covers odd aspects of I/O such as clocks and timers.

I/O Buffering

- Buffering: OS stores (a copy of) data in memory while transferring between devices
  - to cope with device speed mismatch
  - to cope with device transfer size mismatch
  - to maintain "copy semantics"
- OS can use various kinds of buffering:
  1. single buffering — OS assigns a system buffer to the user request
  2. double buffering — process consumes from one buffer while system fills the next
  3. circular buffers — most useful for bursty I/O
- Many aspects of buffering dictated by device type:
  - character devices ⇒ line probably sufficient.
  - network devices ⇒ bursty (time & space).
  - block devices ⇒ lots of fixed size transfers.
  - (last usually major user of buffer memory)

Blocking v. Nonblocking I/O

From programmer's point of view, I/O system calls exhibit one of three kinds of behaviour:

1. Blocking: process suspended until I/O completed
   - easy to use and understand.
   - insufficient for some needs.
2. Nonblocking: I/O call returns as much as available
   - returns almost immediately with count of bytes read or written (possibly 0).
   - can be used by e.g. user interface code.
   - essentially application-level "polled I/O".
3. Asynchronous: process runs while I/O executes
   - I/O subsystem explicitly signals process when its I/O request has completed.
   - most flexible (and potentially efficient).
   - . . . but also most difficult to use.

Most systems provide both blocking and non-blocking I/O interfaces; fewer support asynchronous I/O.

Other I/O Issues

- Caching: fast memory holding copy of data
  - can work with both reads and writes
  - key to I/O performance
- Scheduling:
  - e.g. ordering I/O requests via per-device queue
  - some operating systems try fairness. . .
- Spooling: queue output for a device
  - useful if device is "single user" (i.e. can serve only one request at a time), e.g. printer.
- Device reservation:
  - system calls for acquiring or releasing exclusive access to a device (care required)
- Error handling:
  - e.g. recover from disk read, device unavailable, transient write failures, etc.
  - most I/O system calls return an error number or code when an I/O request fails
  - system error logs hold problem reports.

I/O and Performance

- I/O a major factor in system performance
  - demands CPU to execute device driver, kernel I/O code, etc.
  - context switches due to interrupts
  - data copying
  - metwork traffic especially stressful.
- Improving performance:
  - reduce number of context switches
  - reduce data copying
  - reduce # interrupts by using large transfers, smart controllers, polling
  - use DMA where possible
  - balance CPU, memory, bus and I/O performance for highest throughput.

Improving I/O performance is one of the main remaining systems challenges. . .

File Management

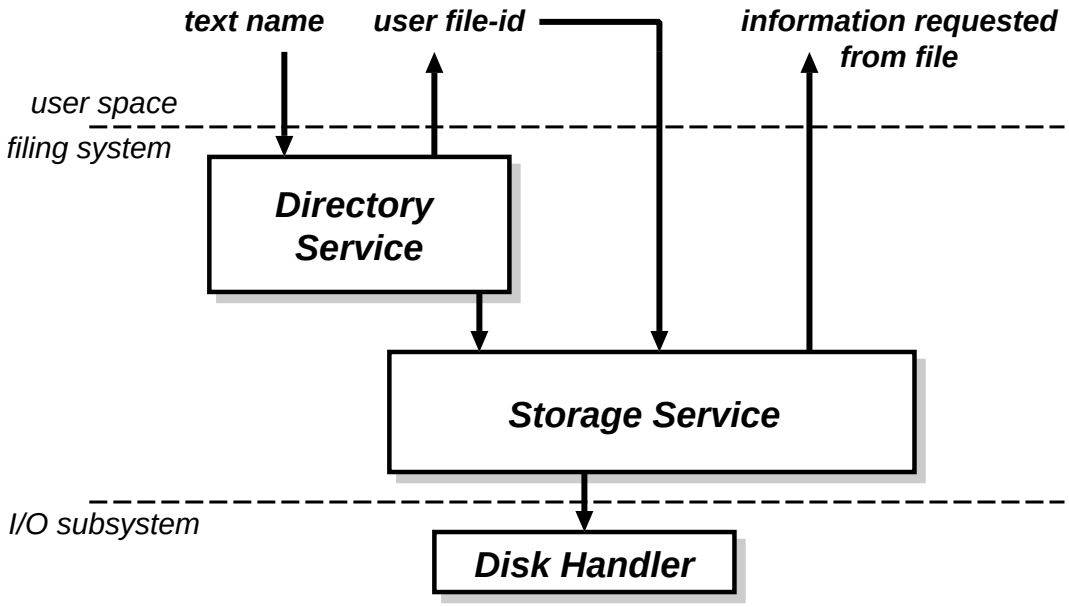

Filing systems have two main components:

1. Directory Service
   - maps from names to file identifiers.
   - handles access & existence control
2. Storage Service
   - provides mechanism to store data on disk
   - includes means to implement directory service

File Concept

What is a file?

- Basic abstraction for non-volatile storage.
- Typically comprises a single contiguous logical address space.
- Internal structure:
  1. None (e.g. sequence of words, bytes)
  2. Simple record structures
     - lines
     - fixed length
     - variable length
  3. Complex structures
     - formatted document
     - relocatable object file
- Can simulate last two with first method by inserting appropriate control characters.
- All a question of who decides:
  - operating system
  - program(mer).

Naming Files

Files usually have at least two kinds of 'name':

1. System file identifier (SFID):
   - (typically) a unique integer value associated with a given file
   - SFIDs are the names used within the filing system itself
2. "Human" name, e.g. `hello.java`
   - What users like to use
   - Mapping from human name to SFID is held in a *directory*, e.g.

Name	SFID
hello.java	12353
Makefile	23812
README	9742

   - Directories also non-volatile ⇒ must be stored on disk along with files.
3. Frequently also get user file identifier (UFID).
   - used to identify *open* files (see later)

File Meta-data

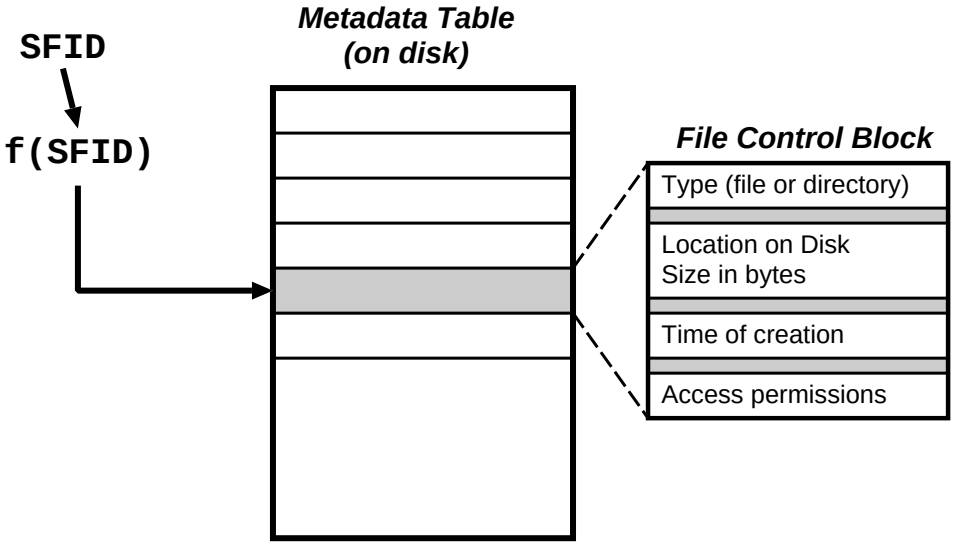

In addition to their contents and their name(s), files typically have a number of other attributes, e.g.

- *Location*: pointer to file location on device
- *Size*: current file size
- *Type*: needed if system supports different types
- *Protection*: controls who can read, write, etc.
- *Time*, *date*, and *user identification*: data for protection, security and usage monitoring.

Together this information is called *meta-data*.
It is contained in a *file control block*.

Directory Name Space (I)

What are the requirements for our name space?

- Efficiency: locating a file quickly.
- Naming: user convenience
  - allow two (or more generally N) users to have the same name for different files
  - allow one file have several different names
- Grouping: logical grouping of files by properties (e.g. all Java programs, all games, . . .)

First attempts:

- Single-level: one directory shared between all users

  $\Rightarrow$ naming problem

  $\Rightarrow$ grouping problem
- Two-level directory: one directory per user
  - access via *pathname* (e.g. `bob:hello.java`)
  - can have same filename for different user
  - but still no grouping capability.

Directory Name Space (II)

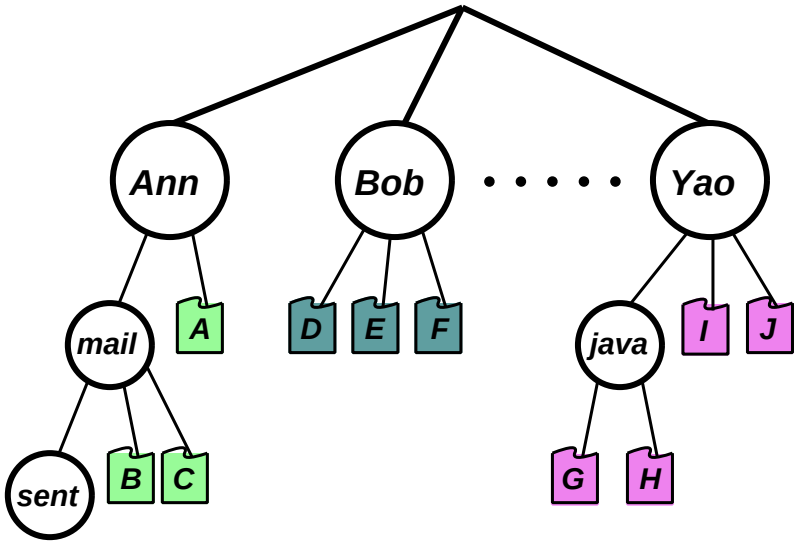

- Get more flexibility with a general *hierarchy*.
  - directories hold files or [further] directories
  - create/delete files relative to a given directory
- Human name is full path name, but can get long:
  e.g. /usr/groups/X11R5/src/mit/server/os/4.2bsd/utils.c
  - offer relative naming
  - login directory
  - current working directory
- What does it mean to delete a [sub]-directory?

Directory Name Space (III)

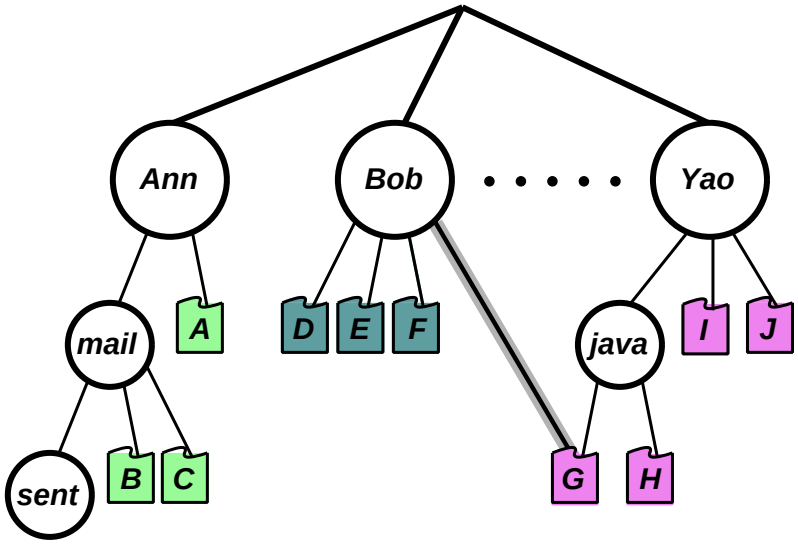

- Hierarchy good, but still only one name per file.

⇒ extend to directed acyclic graph (DAG) structure:

  – allow shared subdirectories and files.
  – can have multiple *aliases* for the same thing

- Problem: dangling references
- Solutions:

  – back-references (but variable size records)
  – reference counts.

- Problem: cycles. . .

Directory Implementation

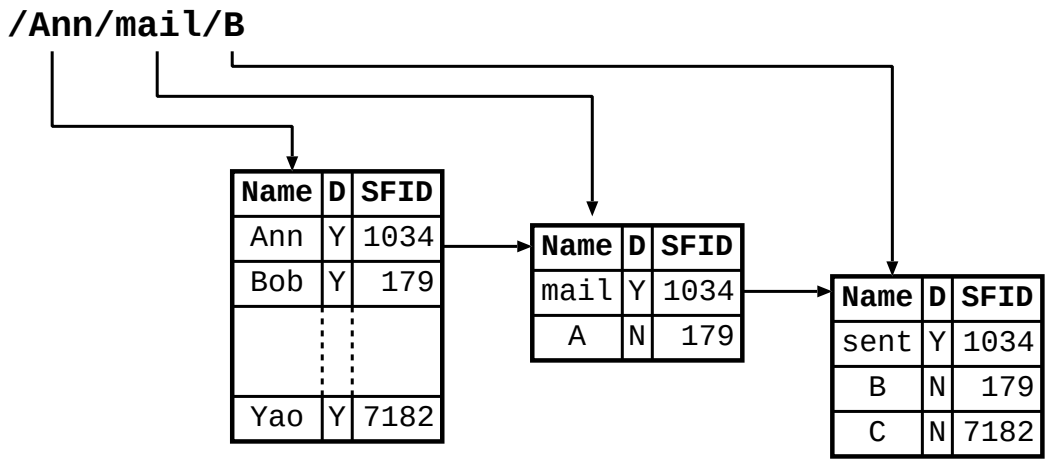

- Directories are non-volatile ⇒ store as "files" on disk, each with own SFID.
- Must be different *types* of file (for traversal)
- Explicit directory operations include:
  - create directory
  - delete directory
  - list contents
  - select current working directory
  - insert an entry for a file (a "link")

File Operations (I)

UFID	SFID	File Control Block (Copy)
1	23421	location on disk, size,...
2	3250	" "
3	10532	" "
4	7122	" "
⋮	⋮	⋮

- Opening a file: `UFID = open(<pathname>)`
  1. directory service recursively searches directories for components of `<pathname>`
  2. if all goes well, eventually get `SFID` of file.
  3. copy file control block into memory.
  4. create new `UFID` and return to caller.
- Create a new file: `UFID = create(<pathname>)`
- Once have `UFID` can read, write, etc.
  - various modes (see next slide)
- Closing a file: `status = close(UFID)`
  1. copy [new] file control block back to disk.
  2. invalidate `UFID`

File Operations (II)

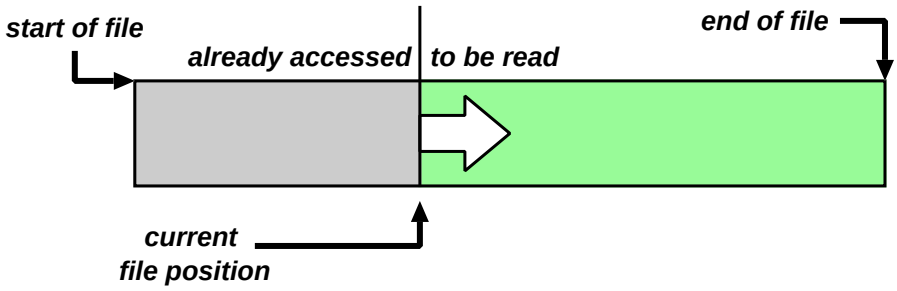

- Associate a *cursor* or *file position* with each open file (viz. UFID), initialised to start of file.
- Basic operations: *read next* or *write next*, e.g.
  - `read(UFID, buf, nbytes)`, or
  - `read(UFID, buf, nrecords)`
- Sequential Access: above, plus `rewind(UFID)`.
- Direct Access: *read* N or *write* N
  - allow "random" access to any part of file.
  - can implement with `seek(UFID, pos)`
- Other forms of data access possible, e.g.
  - append-only (may be faster)
  - indexed sequential access mode (ISAM)

Other Filing System Issues

- Access Control: file owner/creator should be able to control what can be done, and by whom.
  - access control normally a function of directory service ⇒ checks done at file *open* time
  - various types of access, e.g.
    - read, write, execute, (append?),
    - delete, list, rename
  - more advanced schemes possible (see later)
- Existence Control: what if a user deletes a file?
  - probably want to keep file in existence while there is a valid pathname referencing it
  - plus check entire FS periodically for garbage
  - existence control can also be a factor when a file is renamed/moved.
- Concurrency Control: need some form of *locking* to handle simultaneous access
  - may be mandatory or advisory
  - locks may be shared or exclusive
  - granularity may be file or subset

Unix: Introduction

- Unix first developed in 1969 at Bell Labs (Thompson & Ritchie)
- Originally written in PDP-7 asm, but then (1973) rewritten in the 'new' high-level language C

  $\Rightarrow$ easy to port, alter, read, etc.
- 6th edition ("V6") was widely available (1976).
  - source avail $\Rightarrow$ people could write new tools.
  - nice features of other OSes rolled in promptly.
- By 1978, V7 available (for both the 16-bit PDP-11 and the new 32-bit VAX-11).
- Since then, two main families:
  - AT&T: "System V", currently SVR4.
  - Berkeley: "BSD", currently 4.3BSD/4.4BSD.
- Standardisation efforts (e.g. POSIX, X/OPEN) to homogenise.
- Best known "UNIX" today is probably *linux*, but also get FreeBSD, NetBSD, and (commercially) Solaris, OSF/1, IRIX, and Tru64.

Unix Family Tree (Simplified)

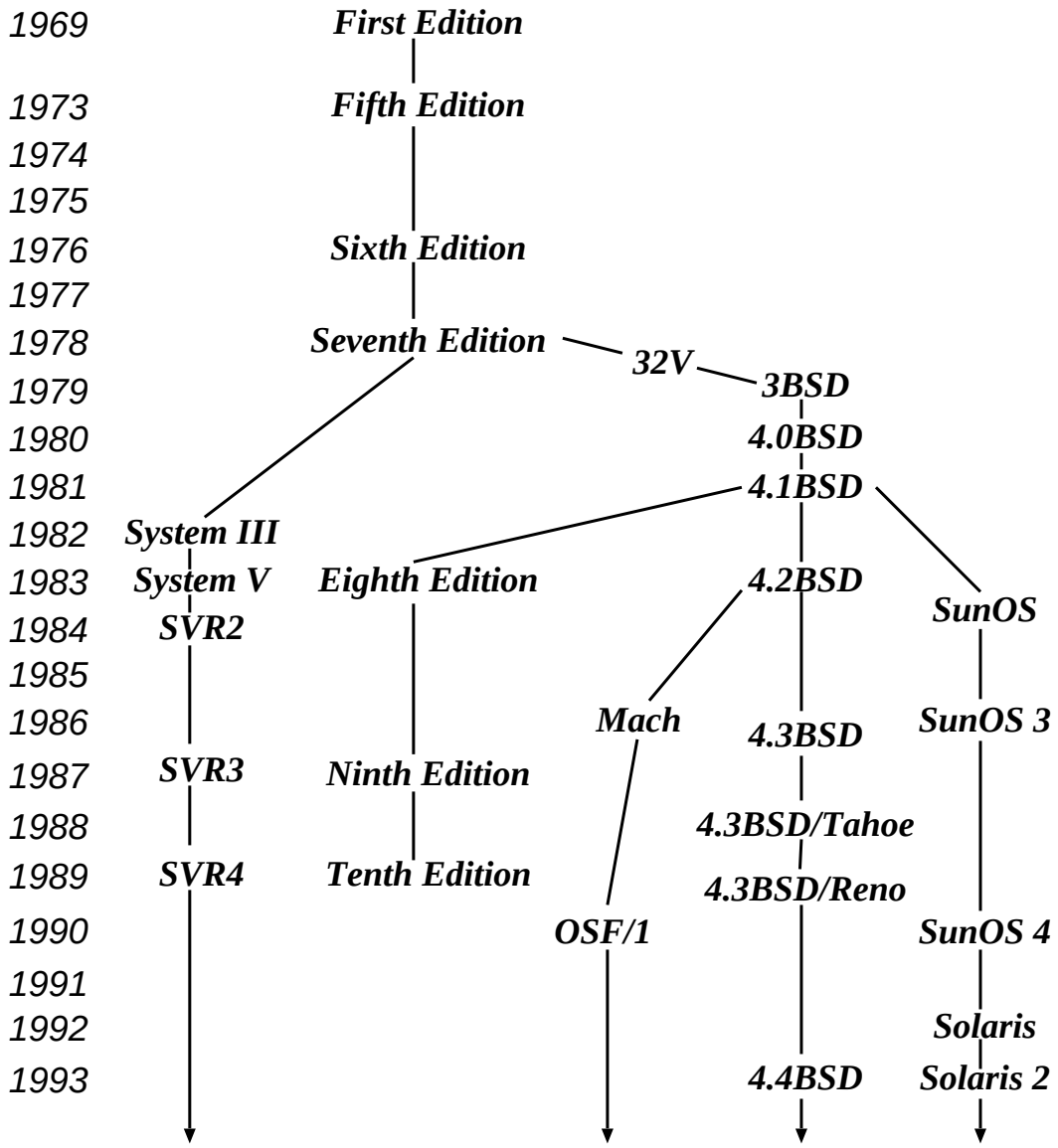

Design Features

Ritchie and Thompson writing in CACM, July 74, identified the following (new) features of UNIX:

1. A hierarchical file system incorporating demountable volumes.
2. Compatible file, device and inter-process I/O.
3. The ability to initiate asynchronous processes.
4. System command language selectable on a per-user basis.
5. Over 100 subsystems including a dozen languages.
6. A high degree of portability.

Features which were not included:

- real time
- multiprocessor support

Fixing the above is pretty hard.

Structural Overview

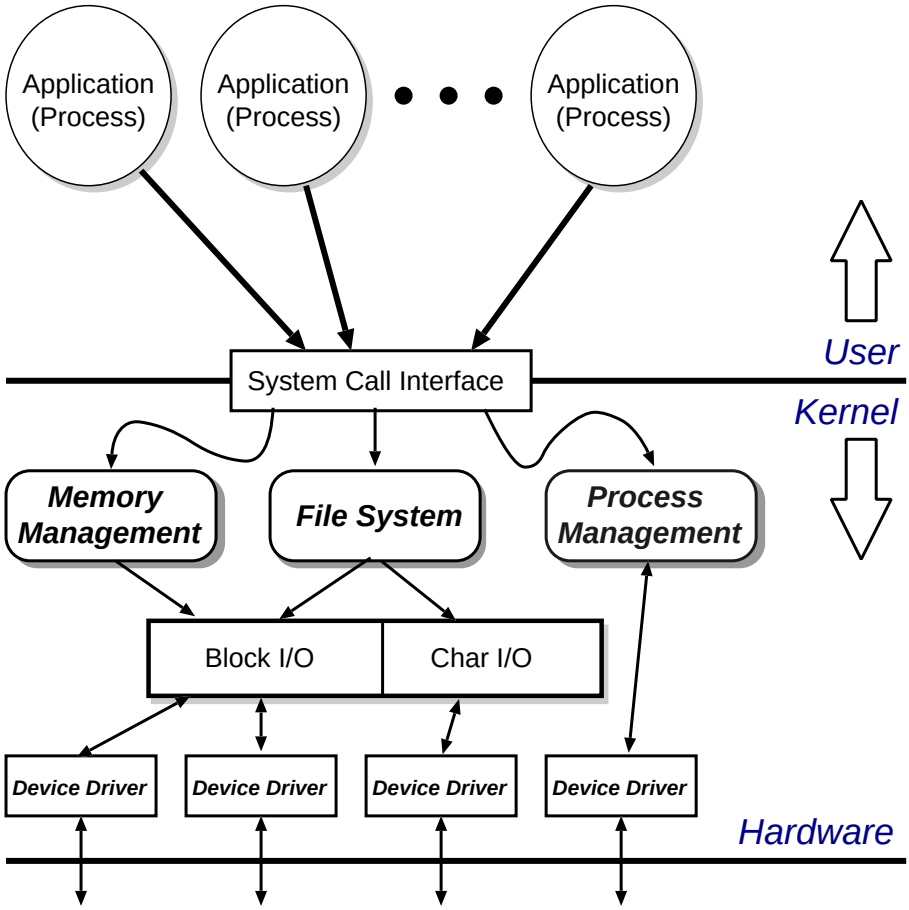

- Clear separation between *user* and *kernel* portions.
- Processes are unit of scheduling and protection.
- All I/O looks like operations on *files*.

File Abstraction

- A file is an unstructured sequence of bytes.
- Represented in user-space by a *file descriptor* (fd)
- Operations on files are:
  - *fd* = **open** (*pathname*, *mode*)
  - *fd* = **creat**(*pathname*, *mode*))
  - bytes = **read**(*fd*, *buffer*, *nbytes*)
  - count = **write**(*fd*, *buffer*, *nbytes*)
  - reply = **seek**(*fd*, *offset*, *whence*)
  - reply = **close**(*fd*)
- Devices represented by *special files*:
  - support above operations, although perhaps with bizarre semantics.
  - also have `ioctl`'s: allow access to device-specific functionality.
- Hierarchical structure supported by *directory files*.

Directory Hierarchy

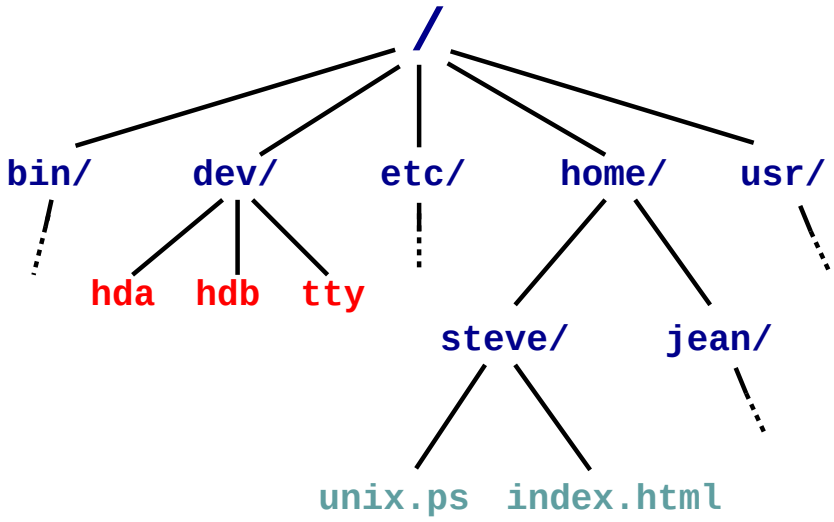

- Directories map names to files (and directories).
- Have distinguished *root directory* called '/'
- Fully qualified pathnames ⇒ perform traversal from root.
- Every directory has '.' and '..' entries: refer to self and parent respectively.
- Shortcut: current working directory (*cwd*).
- In addition *shell* provides access to *home directory* as ~*username* (e.g. ~steve/)

Aside: Password File

- `/etc/passwd` holds list of password entries.
- Each entry roughly of the form:

  user-name:*encrypted-passwd*:*home-directory*:*shell*

- Use *one-way function* to encrypt passwords.
  - i.e. a function which is easy to compute in one direction, but has a hard to compute inverse.
- To login:
  1. Get user name
  2. Get password
  3. Encrypt password
  4. Check against version in `/etc/password`
  5. If ok, instantiate login shell.
- Publicly readable since lots of useful info there.
- Problem: off-line attack.
- Solution: *shadow passwords* (`/etc/shadow`)

File System Implementation

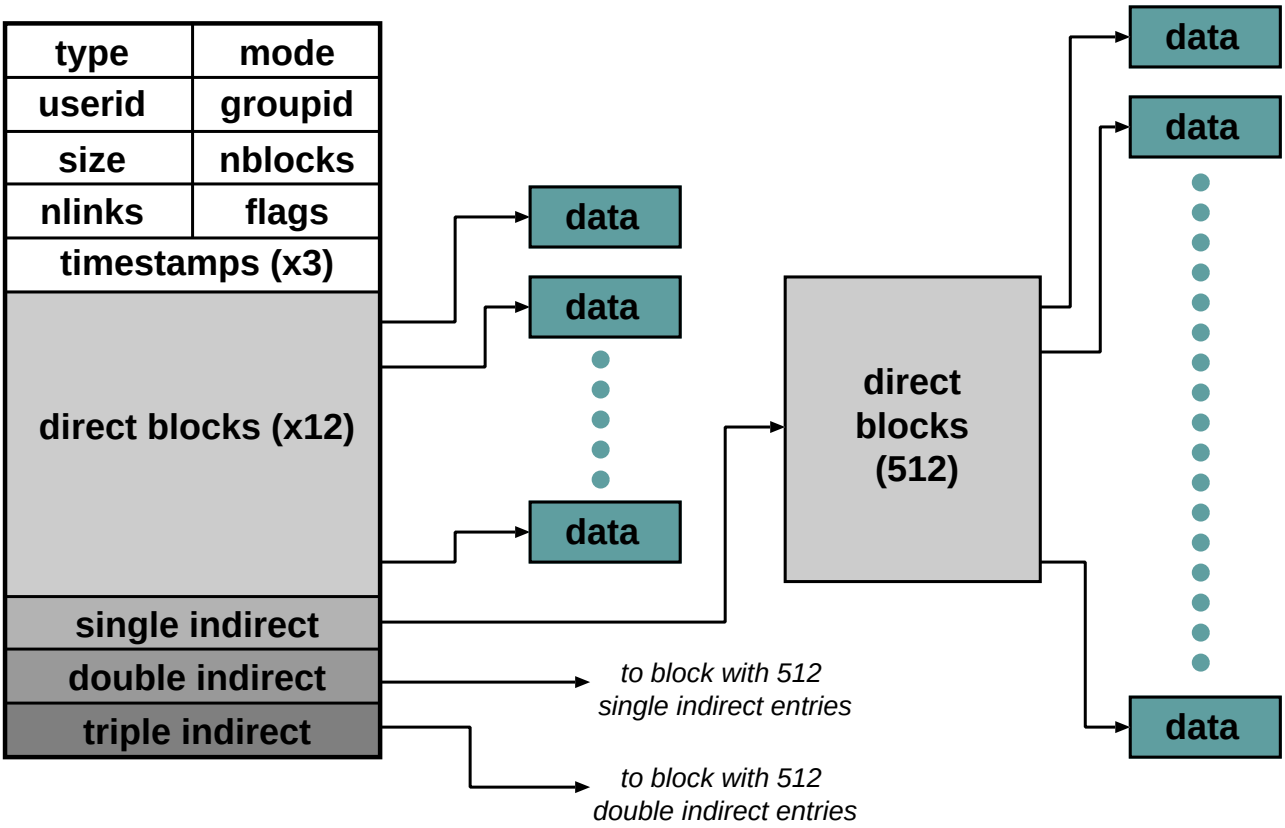

- Inside kernel, a file is represented by a data structure called an index-node or *i-node*.
- Holds file *meta-data*:

  a) Owner, permissions, reference count, etc.
  b) Location on disk of actual data (file contents).
- Where is the filename kept?

Directories and Links

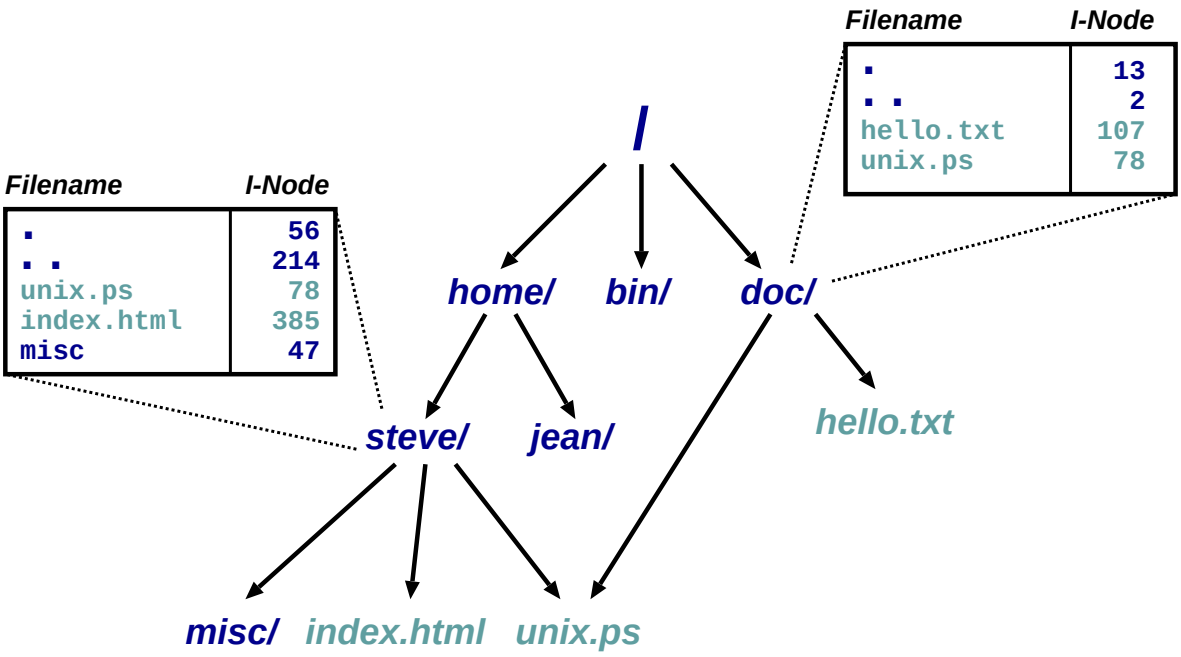

- Directory is a file which maps filenames to i-nodes.
- An instance of a file in a directory is a (hard) *link*.
- (this is why have reference count in i-node).
- Directories can have at most 1 (real) link. Why?
- Also get *soft*- or *symbolic*-links: a 'normal' file which contains a filename.

On-Disk Structures

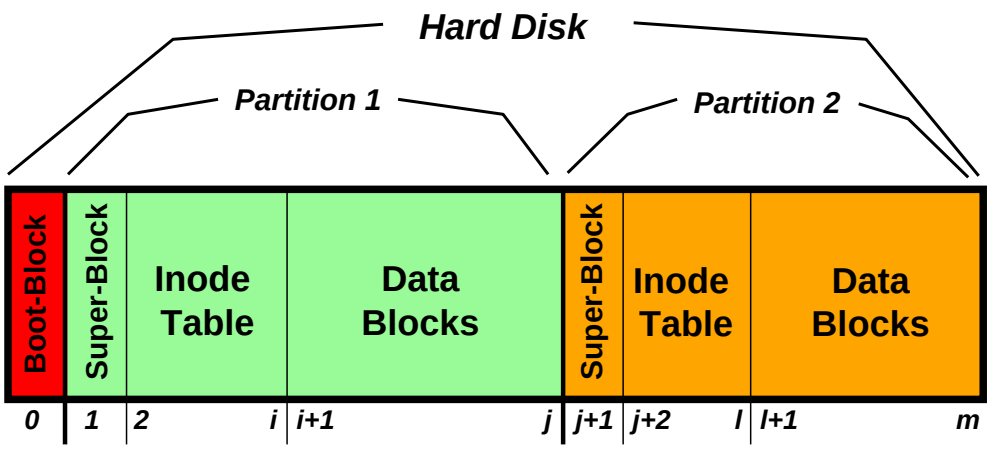

- A disk is made up of a *boot block* followed by one or more *partitions*.
- (a partition is just a contiguous range of N fixed-size blocks of size k for some N and k).
- A Unix file-system resides within a partition.
- *Superblock* contains info such as:
  - number of blocks in file-system
  - number of free blocks in file-system
  - start of the free-block list
  - start of the free-inode list.
  - various bookkeeping information.

Mounting File-Systems

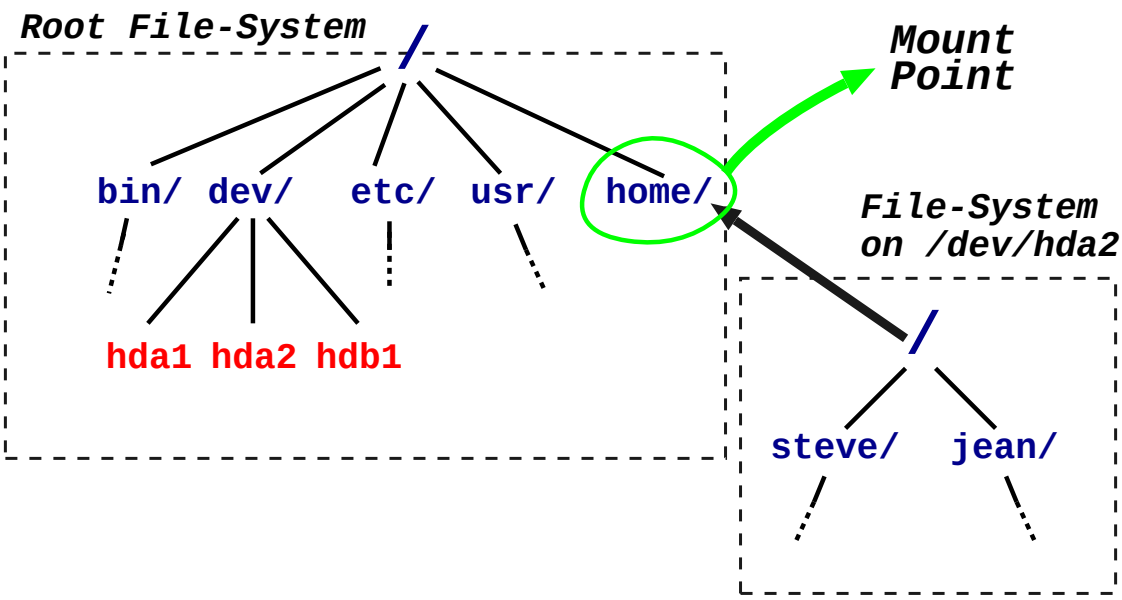

- Entire file-systems can be *mounted* on an existing directory in an already mounted filesystem.
- At very start, only '`/`' exists ⇒ need to mount a *root file-system*.
- Subsequently can mount other file-systems, e.g. `mount("/dev/hda2", "/home", options)`
- Provides a *unified name-space*: e.g. access `/home/steve/` directly.
- Cannot have hard links across mount points: why?
- What about soft links?

In-Memory Tables

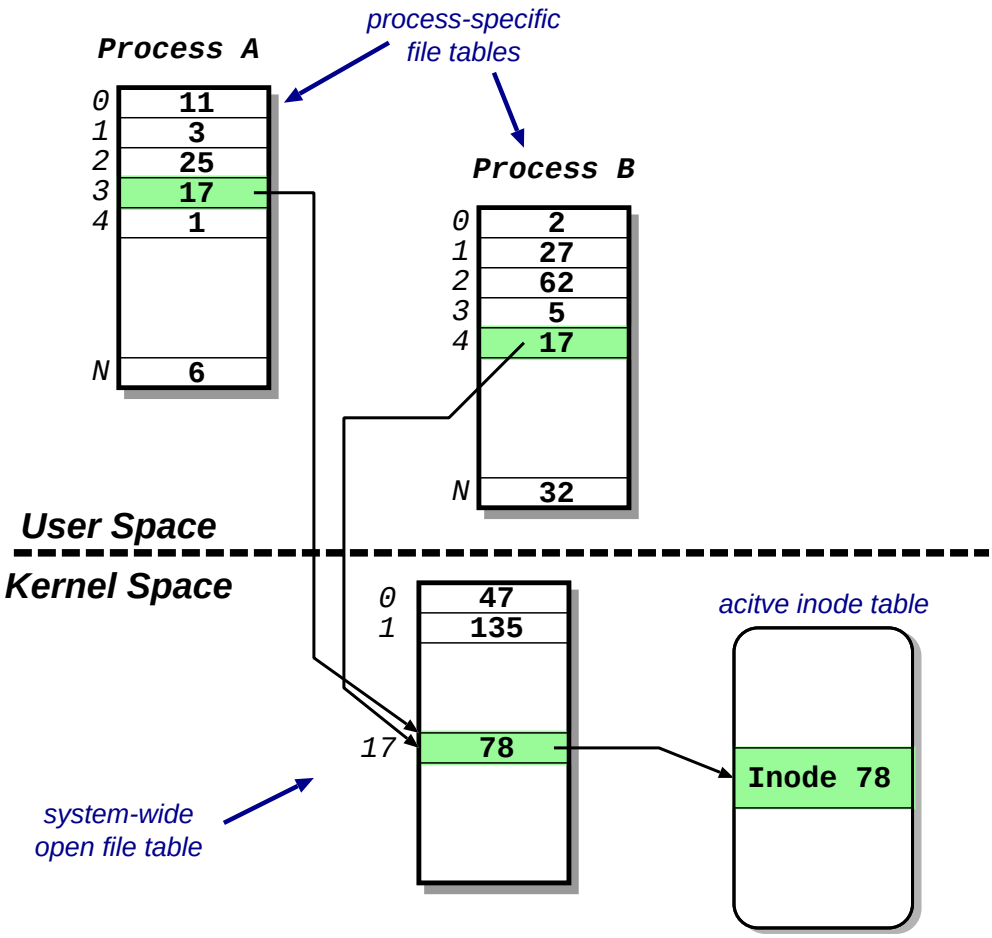

- Recall process sees files as *file descriptors*
- In implementation these are just indices into *process-specific open file table*
- Entries point to *system-wide open file table*. Why?
- These in turn point to (in memory) inode table.

Access Control

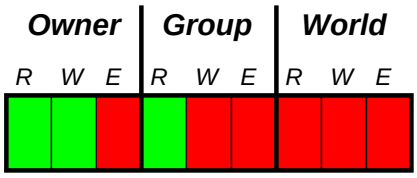

= 0640

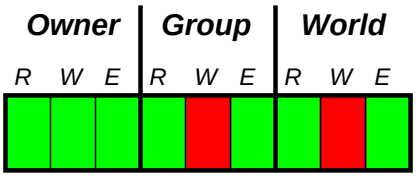

= 0755

- Access control information held in each inode.
- Three bits for each of *owner*, *group* and *world*: read, write and execute.
- What do these mean for directories?
- In addition have *setuid* and *setgid* bits:
  - normally processes inherit permissions of invoking user.
  - setuid/setgid allow user to "become" someone else when running a given program.
  - e.g. `prof` owns both executable `test` (0711 and setuid), and `score` file (0600)

    ⇒ anyone user can run it.

    ⇒ it can update `score` file.

    ⇒ but users can't cheat.
- And what do *these* mean for directories?

Consistency Issues

- To delete a file, use the `unlink` system call.
- From the shell, this is `rm <filename>`
- Procedure is:
  1. check if user has sufficient permissions on the file (must have *write* access).
  2. check if user has sufficient permissions on the directory (must have *write* access).
  3. if ok, remove entry from directory.
  4. Decrement reference count on inode.
  5. if now zero:
     a. free data blocks.
     b. free inode.
- If *crash*: must check entire file-system:
  - check if any block unreferenced.
  - check if any block double referenced.

Unix File-System: Summary

- Files are unstructured byte streams.
- Everything is a file: 'normal' files, directories, symbolic links, special files.
- Hierarchy built from root ('/').
- Unified name-space (multiple file-systems may be mounted on any leaf directory).
- Low-level implementation based around *inodes*.
- Disk contains list of inodes (along with, of course, actual data blocks).
- Processes see *file descriptors*: small integers which map to system file table.
- Permissions for owner, group and everyone else.
- Setuid/setgid allow for more flexible control.
- Care needed to ensure consistency.

Unix Processes

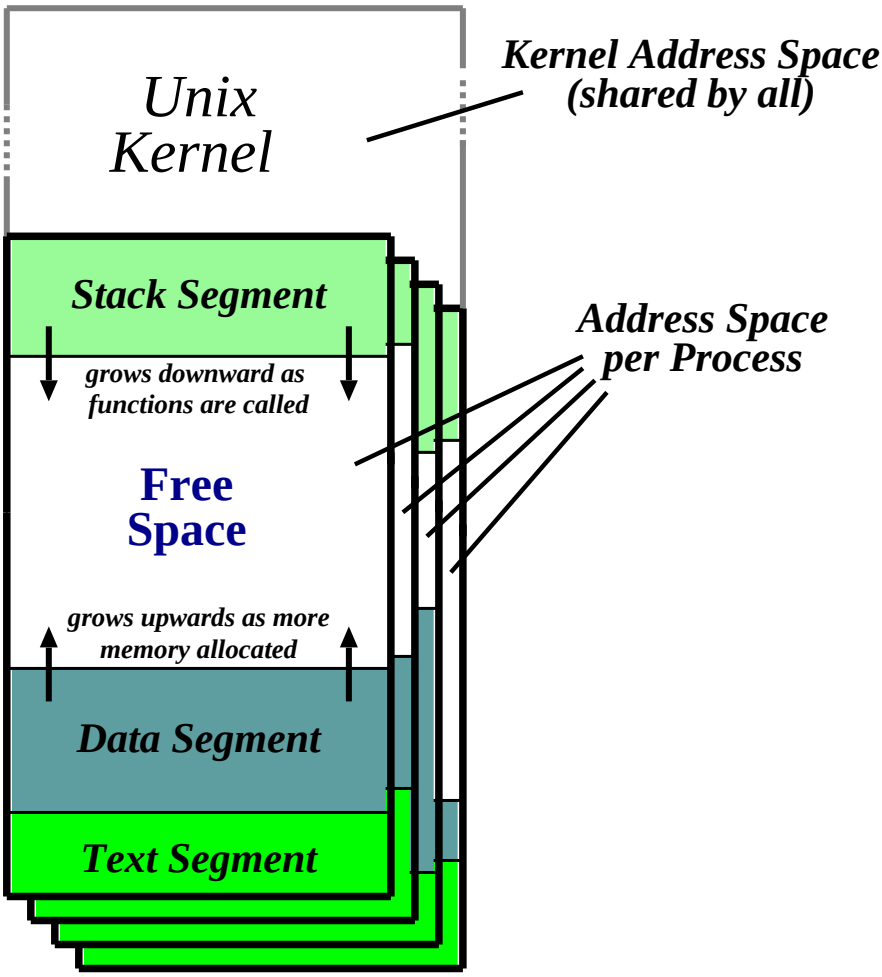

- Recall: a process is a program in execution.
- Have three *segments*: `text`, `data` and `stack`.
- Unix processes are *heavyweight*.

Unix Process Dynamics

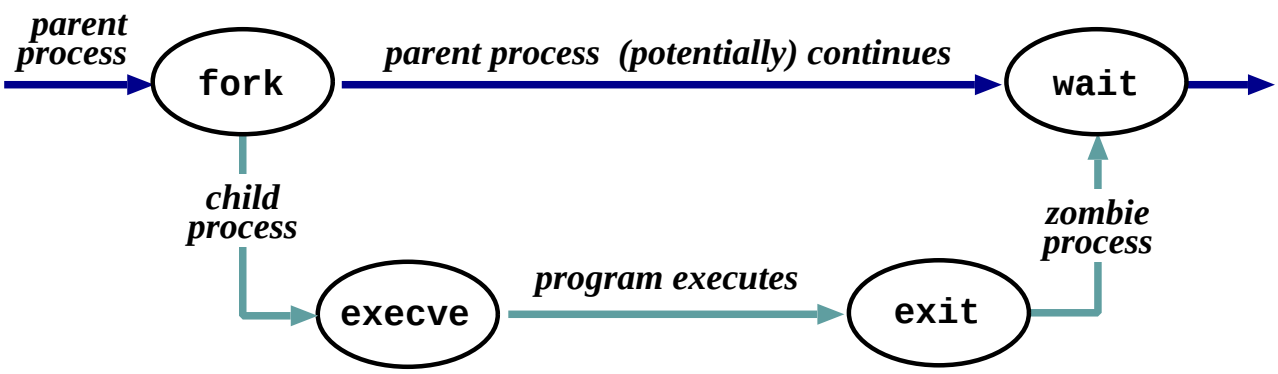

- Process represented by a *process id* (pid)
- Hierarchical scheme: parents create children.
- Four basic primitives:
  - *pid* = **fork** ()
  - reply = **execve**(*pathname*, *argv*, *envp*)
  - **exit**(*status*)
  - *pid* = **wait** (*status*)
- **fork()** nearly *always* followed by **exec()**

  ⇒ **vfork()** and/or COW.

Start of Day

- Kernel (`/vmunix`) loaded from disk (how?) and execution starts.
- Root file-system mounted.
- Process 1 (`/etc/init`) hand-crafted.
- init reads file `/etc/inittab` and for each entry:
  1. opens terminal special file (e.g. `/dev/tty0`)
  2. duplicates the resulting fd twice.
  3. forks an `/etc/tty` process.
- each tty process next:
  1. initialises the terminal
  2. outputs the string "`login:`" & waits for input
  3. execve()'s `/bin/login`
- login then:
  1. outputs "`password:`" & waits for input
  2. encrypts password and checks it against `/etc/passwd`.
  3. if ok, sets uid & gid, and execve()'s shell.
- Patriarch init resurrects `/etc/tty` on exit.

The Shell

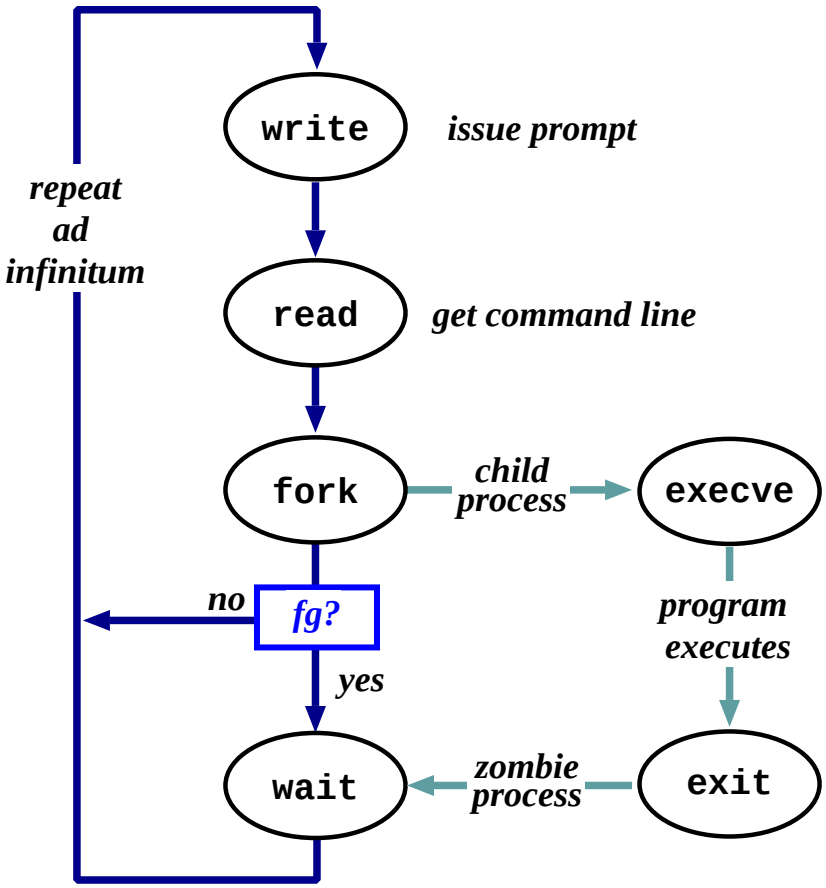

- Shell just a process like everything else.
- Uses *path* for convenience.
- Conventionally '&' specifies *background*.
- Parsing stage (omitted) can do lots. . .

Shell Examples

```
# pwd
/home/steve
# ls -F
IRAM.micro.ps                gnome_sizes        prog-nc.ps
Mail/                        ica.tgz            rafe/
OSDI99_self_paging.ps.gz     lectures/          rio107/
TeX/                         linbot-1.0/        src/
adag.pdf                     manual.ps          store.ps.gz
docs/                        past-papers/       wolfson/
emacs-lisp/                  pbosch/            xeno_prop/
fs.html                      pepsi_logo.tif
# cd src/
# pwd
/home/steve/src
# ls -F
cdq/         emacs-20.3.tar.gz  misc/      read_mem.c
emacs-20.3/  ispell/            read_mem*  rio007.tgz
# wc read_mem.c
     95     225    2262 read_mem.c
# ls -lF r*
-rwxrwxr-x   1 steve  user    34956 Mar 21  1999 read_mem*
-rw-rw-r--   1 steve  user     2262 Mar 21  1999 read_mem.c
-rw-------   1 steve  user    28953 Aug 27 17:40 rio007.tgz
# ls -l /usr/bin/X11/xterm
-rwxr-xr-x   2 root   system 164328 Sep 24 18:21 /usr/bin/X11/xterm*
```

- Prompt is '#'.
- Use `man` to find out about commands.
- User friendly?

Standard I/O

- Every process has three fds on creation:
  - **stdin**: where to read input from.
  - **stdout**: where to send output.
  - **stderr**: where to send diagnostics.
- Normally inherited from parent, but shell allows *redirection* to/from a file, e.g.:
  - `ls >listing.txt`
  - `ls >&listing.txt`
  - `sh <commands.sh`.
- Actual file not always appropriate; e.g. consider:

```
ls >temp.txt;
wc <temp.txt >results
```

- *Pipeline* is better (e.g. `ls | wc >results`)
- Most Unix commands are *filters* ⇒ can build almost arbitrarily complex command lines.
- Redirection can cause some buffering subtleties.

Pipes

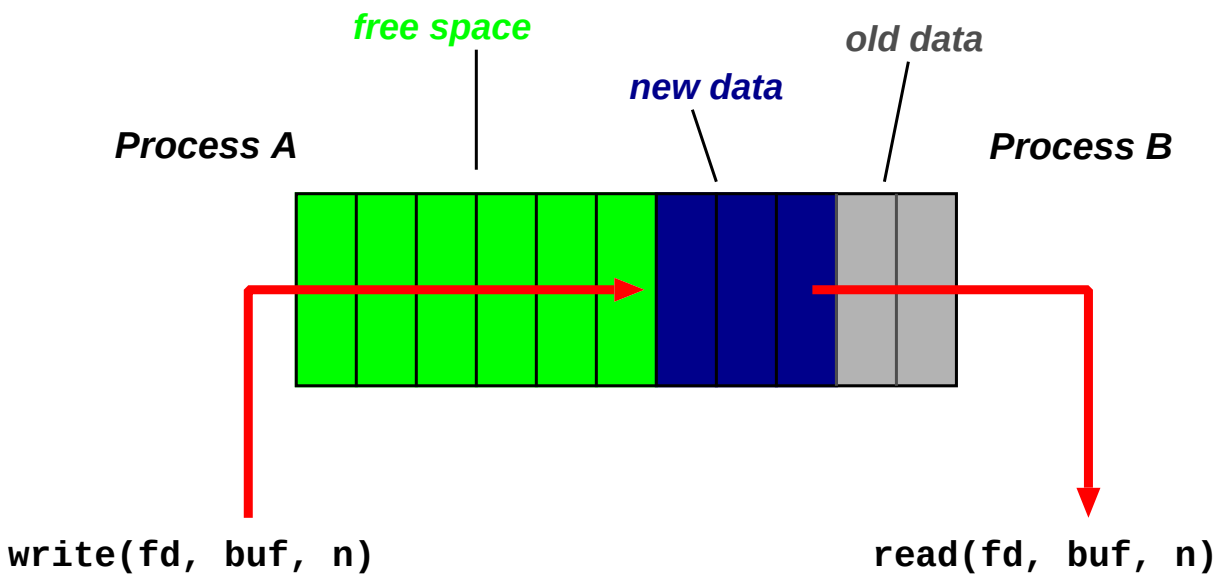

- One of the basic Unix IPC schemes.
- Logically consists of a pair of fds
- e.g. reply = **pipe**(int fds[2])
- Concept of "full" and "empty" pipes.
- Only allows communication between processes with a common ancestor (why?).
- *Named pipes* address this.

Signals

- Problem: pipes need planning ⇒ use *signals*.
- Similar to a (software) interrupt.
- Examples:
  - `SIGINT` : user hit Ctrl-C.
  - `SIGSEGV` : program error.
  - `SIGCHLD` : a death in the family. . .
  - `SIGTERM` : . . . or closer to home.
- Unix allows processes to *catch* signals.
- e.g. Job control:
  - `SIGTTIN`, `SIGTTOU` sent to bg processes
  - `SIGCONT` turns bg to fg.
  - `SIGSTOP` does the reverse.
- Cannot catch `SIGKILL` (hence `kill -9`)
- Signals can also be used for timers, window resize, process tracing, . . .

I/O Implementation

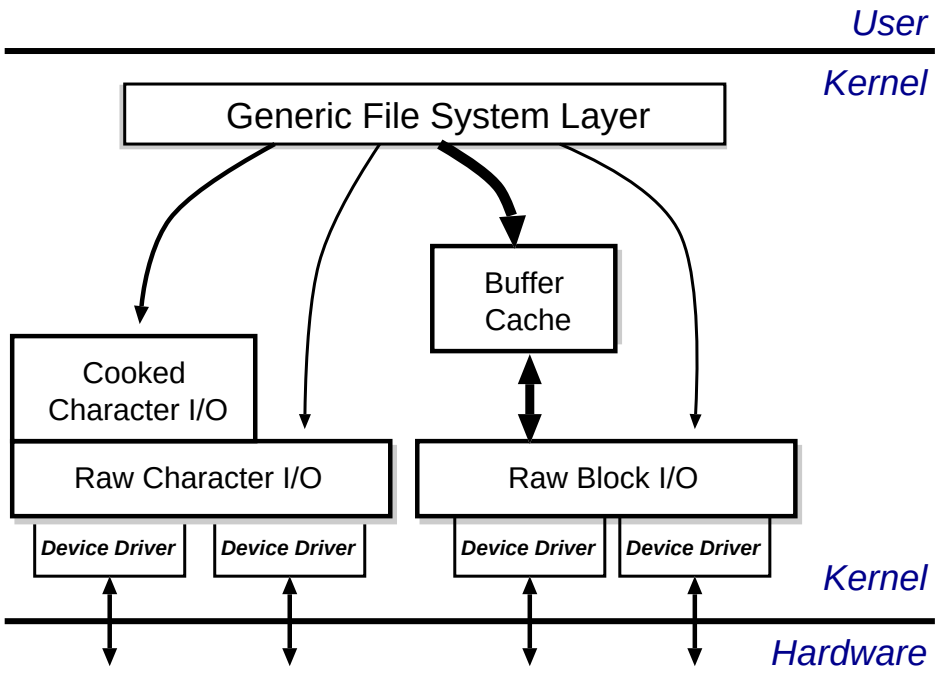

- Recall:
  - everything accessed via the file system.
  - two broad categories: block and char.
- Low-level stuff gory and machdep ⇒ ignore.
- Character I/O low rate but complex ⇒ most functionality in the "cooked" interface.
- Block I/O simpler but performance matters ⇒ emphasis on the *buffer cache*.

The Buffer Cache

- Basic idea: keep copy of some parts of disk in memory for speed.
- On read do:
  1. Locate relevant blocks (from inode)
  2. Check if in buffer cache.
  3. If not, read from disk into memory.
  4. Return data from buffer cache.
- On write do *same* first three, and then update version in cache, not on disk.
- "Typically" prevents 85% of implied disk transfers.
- Question: when does data actually hit disk?
- Answer: call `sync` every 30 seconds to flush dirty buffers to disk.
- Can cache metadata too — problems?

Unix Process Scheduling

- Priorities 0–127; user processes $\geq$ `PUSER` $= 50$.
- Round robin within priorities, quantum 100ms.
- Priorities are based on usage and *nice*, i.e.

$$P_j(i) = Base_j + \frac{CPU_j(i-1)}{4} + 2 \times nice_j$$

  gives the priority of process j at the beginning of interval i where:

$$CPU_j(i) = \frac{2 \times load_j}{(2 \times load_j) + 1} CPU_j(i-1) + nice_j$$

  and $nice_j$ is a (partially) user controllable adjustment parameter $\in [-20, 20]$.

- $load_j$ is the sampled average length of the run queue in which process j resides, over the last minute of operation
- so if e.g. load is 1 $\Rightarrow \sim$ 90% of 1 seconds CPU usage "forgotten" within 5 seconds.

Unix Process States

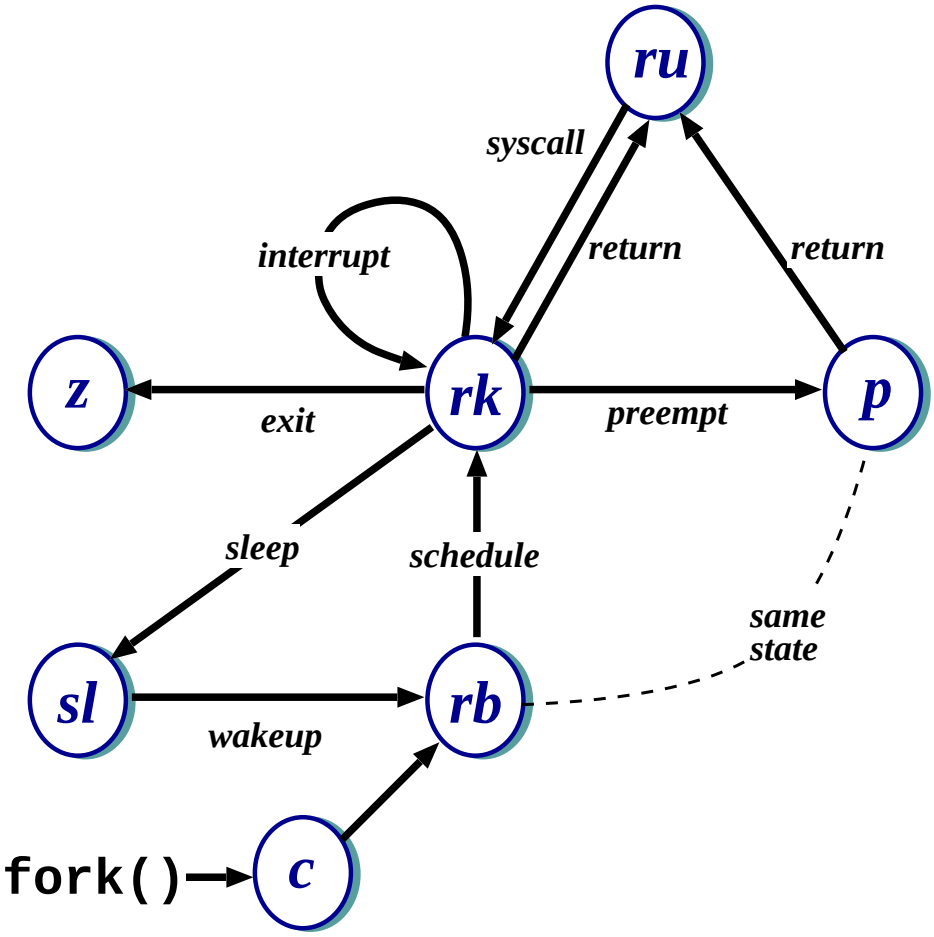

ru	=	running (user-mode)	rk	=	running (kernel-mode)
z	=	zombie	p	=	pre-empted
sl	=	sleeping	rb	=	runnable
c	=	created			

- Note: above is simplified — see CS section 23.14 for detailed descriptions of all states/transitions.

Summary

- Main Unix features are:
  - file abstraction
    - a file is an unstructured sequence of bytes
    - (not really true for device and directory files)
  - hierarchical namespace
    - directed acyclic graph (if exclude soft links)
    - can recursively mount filesystems
  - heavy-weight processes
  - IPC: pipes & signals
  - I/O: block and character
  - dynamic priority scheduling
    - base priority level for all processes
    - priority is lowered if process gets to run
    - over time, the past is forgotten
- But V7 had inflexible IPC, inefficient memory management, and poor kernel concurrency.
- Later versions address these issues.

Windows NT: History

After OS/2, MS decide they need "**N**ew **T**echnology":

- 1988: Dave Cutler recruited from DEC.
- 1989: team ($\sim$ 10 people) starts work on a new OS with a micro-kernel architecture.
- July 1993: first version (3.1) introduced

Bloated and suckful $\Rightarrow$

- NT 3.5 released in September 1994: mainly size and performance optimisations.
- Followed in May 1995 by NT 3.51 (support for the Power PC, and more performance tweaks)
- July 1996: NT 4.0
  - new (windows 95) look 'n feel
  - various functions pushed back into kernel (most notably graphics rendering functions)
- Feb 2000: NT 5.0 aka Windows 2000
  - big push to finally kill DOS/Win 9x family

Windows XP (NT 6.0) coming June 2001. . .

NT Design Principles

Key goals for the system were:

- portability
- security
- POSIX compliance
- multiprocessor support
- extensibility
- international support
- compatibility with MS-DOS/Windows applications

This led to the development of a system which was:

- written in high-level languages (C and C++)
- based around a micro-kernel, and
- constructed in a layered/modular fashion.

Structural Overview

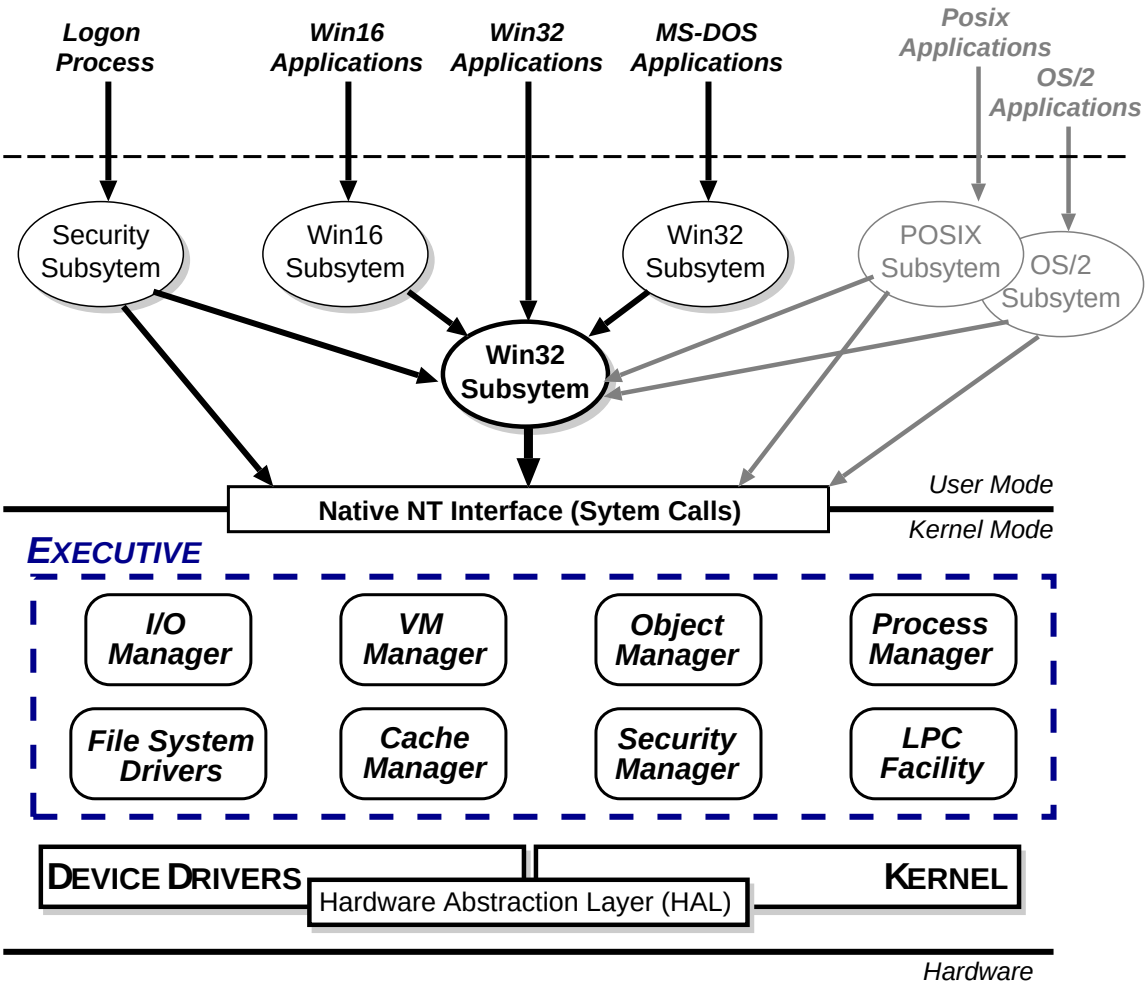

- Kernel Mode: HAL, Kernel, & Executive
- User Mode:
  - environmental subsystems
  - protection subsystem

HAL

- Layer of software (`HAL.DLL`) which hides details of underlying hardware
- e.g. interrupt mechanisms, DMA controllers, multiprocessor communication mechanisms
- Many HALs exist with same *interface* but different *implementation* (often vendor-specific)

Kernel

- Foundation for the executive and the subsystems
- Execution is never preempted.
- Four main responsibilities:
  1. CPU scheduling
  2. interrupt and exception handling
  3. low-level processor synchronisation
  4. recovery after a power failure
- Kernel is objected-oriented; all objects either *dispatcher objects* and *control objects*

Processes and Threads

NT splits the "virtual processor" into two parts:

1. A **process** is the unit of resource ownership.
   Each process has:
   - a security token,
   - a virtual address space,
   - a set of resources (*object handles*), and
   - one or more *threads*.
2. A **thread** are the unit of dispatching.
   Each thread has:
   - a scheduling state (ready, running, etc.),
   - other scheduling parameters (priority, etc),
   - a context slot, and
   - (generally) an associated process.

Threads are:

- co-operative: all threads in a process share the same address space & object handles.
- lightweight: require less work to create/delete than processes (mainly due to shared VAS).

CPU Scheduling

- Hybrid static/dynamic priority scheduling:
  - Priorities 16–31: "real time" (static priority).
  - Priorities 1–15: "variable" (dynamic) priority.
- Default quantum 2 ticks ($\sim$20ms) on Workstation, 12 ticks ($\sim$120ms) on Server.
- Threads have *base* and *current* ($\geq$ base) priorities.
  - On return from I/O, current priority is *boosted* by driver-specific amount.
  - Subsequently, current priority decays by 1 after each completed quantum.
  - Also get boost for GUI threads awaiting input: current priority boosted to 14 for one quantum (but quantum also doubled)
  - Yes, this is true.
- On Workstation also get *quantum stretching*:
  - ". . . performance boost for the foreground application" (window with focus)
  - fg thread gets double or triple quantum.

Object Manager

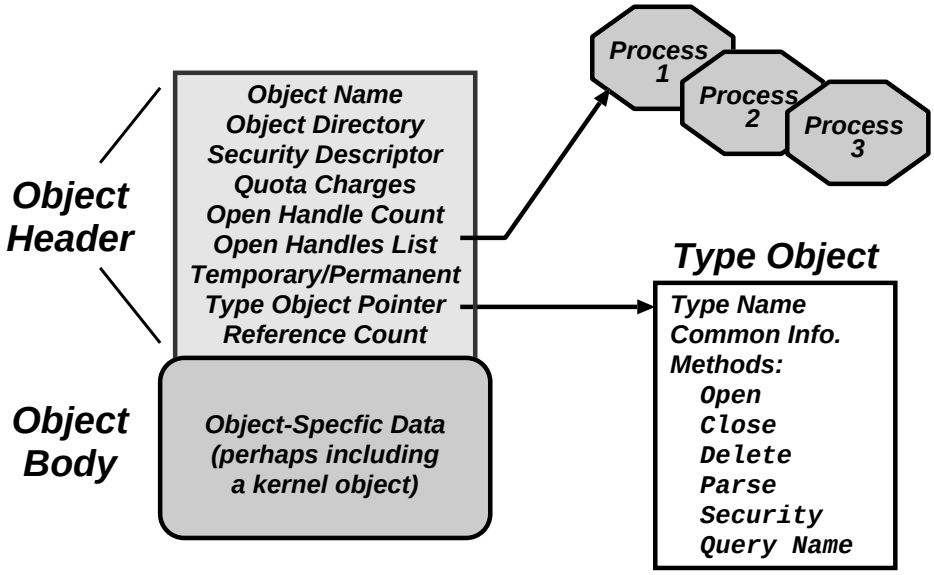

- Every resource in NT is represented by an *object*
- The Object Manager (part of the Executive) is responsible for:
  - creating objects and *object handles*
  - performing security checks
  - tracking which processes are using each object
- Typical operation:
  - `handle = open(objectname, accessmode)`
  - `result = service(handle, arguments)`

Object Namespace

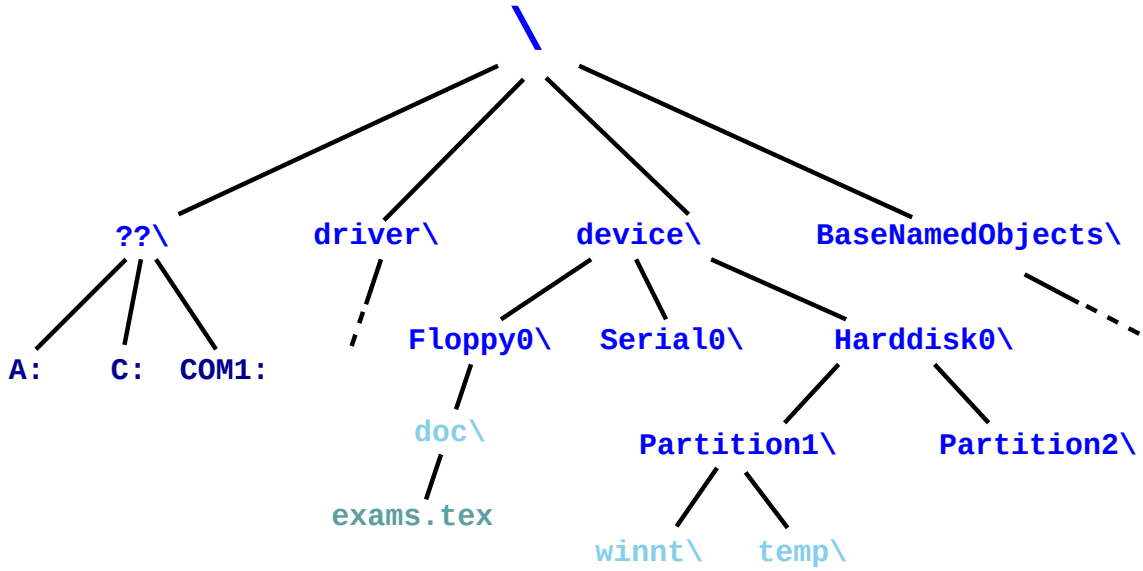

- Recall: objects (optionally) have a name
- Object Manger manages a hierarchical namespace:
  - shared between all processes ⇒ sharing
  - implemented via *directory objects*
  - each object protected by an access control list.
  - *naming domains* (implemented via `parse`) mean file-system namespaces can be integrated
- Also get *symbolic link objects*: allow multiple names (aliases) for the same object.
- Modified view presented at API level. . .

Process Manager

- Provides services for creating, deleting, and using threads and processes.
- Very flexible:
  - no built in concept of parent/child relationships or process hierarchies
  - processes and threads treated orthogonally.

  $\Rightarrow$ can support Posix, OS/2 and Win32 models.

Virtual Memory Manager

- NT employs paged virtual memory management
- The VMM provides processes with services to:
  - allocate and free virtual memory
  - modify per-page protections
- Can also share portions of memory:
  - use *section objects* ($\approx$ software segments)
  - based verus non-based.
  - also used for *memory-mapped files*

I/O Manager

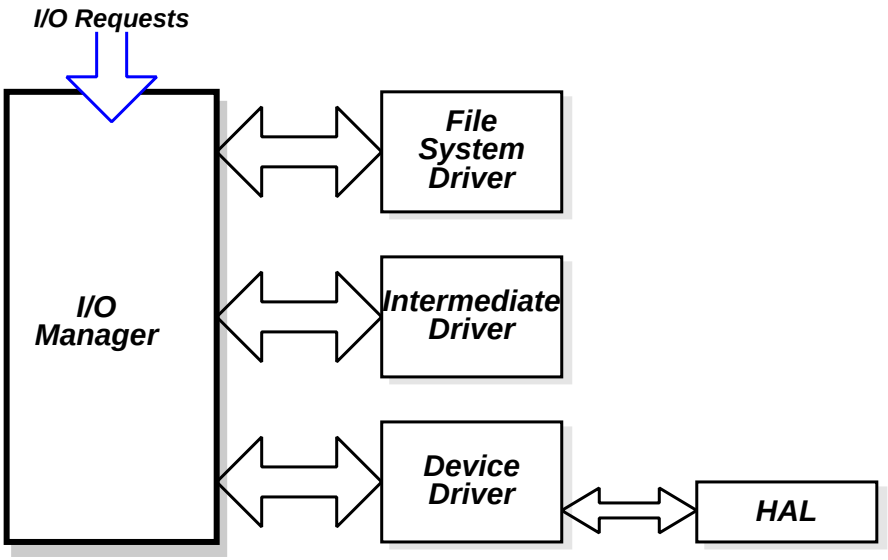

- The I/O Manager is responsible for:
  - file systems
  - cache management
  - device drivers
- Basic model is *asynchronous*:
  - each I/O operation explicitly split into a request and a response
  - *I/O Request Packet* (IRP) used to hold parameters, results, etc.
- File-system & device drivers are *stackable*. . .

File System

- The fundamental structure of the NT filing system (NTFS) is a *volume*
  - created by the NT disk administrator utility
  - based on a logical disk partition
  - may occupy a portion of a disk, and entire disk, or span across several disks.
- A file in NTFS is not a simple byte stream, as in MS-DOS or UNIX, rather, it is a structured object consisting of *attributes*.
- Every file in NTFS is described by one or more records in an array stored in a special file called the Master File Table (MFT).
- NTFS has a number of advanced features, e.g.
  - security (access checks on open)
  - unicode based names
  - use of a log for efficient recovery
  - support for sparse and compressed files
- (but only recently are features being used)

Summary

- Main Windows NT features are:
  - layered/modular architecture:
  - generic use of objects throughout
  - multi-threaded processes
  - multiprocessor support
  - asynchronous I/O subsystem
  - advanced filing system
  - preemptive priority-based scheduling
- Design essentially more advanced than Unix.
- Implementation of lower levels (HAL, kernel & executive) actually rather decent.
- But: has historically been crippled by
  - almost exclusive use of Win32 API
  - legacy device drivers (e.g. VXDs)
  - lack of demand for "advanced" features
- Windows XP + Luna might finally break free. . .

Course Review

- Part I: Computer Organisation
  - "how does a computer work?"
  - fetch-execute cycle, data representation, etc
  - NB: 'circuit diagrams' *not* examinable
- Part II: Operating System Functions.
  - OS structures: h/w support, kernel vs. μ-kernel
  - Processes: states, structures, scheduling
  - Memory: virtual addresses, sharing, protection
  - I/O subsytem: polling/interrupts, buffering.
  - Filing: directories, meta-data, file operations.
- Part III: Case Studies.
  - Unix: file abstraction, command 'extensibility'
  - Windows NT: layering, objects, asynch. I/O.